82/117

Pat No 2381,422

FEED ROD AND LEADSCREW

FEED ROD AND LEADSCREW GEARING

END GEAR DRIVE TO ACTUATE LEADSCREW

LEADSCREW

LEADSCREW REVERSE GEARING - IN HEADSTOCK

BELT DRIVE AND GEARING FOR DRIVING FEED ROD ONLY

FEED ROD

TUMBLER SHIFTING MECHANISM

QUICK CHANGE CONE GEARS

TUMBLER GEAR LOCKING DEVICE

SPEED RANGE SELECTOR

CLUTCH DEVICE TO SELECT LEADSCREW OR FEED ROD

DIAL INDICATOR AND DRIVE

CLUTCH FOR FORWARD, NEUTRAL AND REVERSE OF HEADSTOCK GEARING

TACHOMETER DRIVE

APRON FEED

DRIVE FROM FEED ROD TO CARRIAGE AND CROSS SLIDE

REVERSE GEARING FOR REVERSING CARRIAGE OR CROSS SLIDE

DRIVE FOR CROSS SLIDE

DRIVE FOR CARRIAGE

MANUAL GEARING TO DRIVE CARRIAGE

HALF NUT

82/117

O.G. FIG.
CLASS SUB CLASS

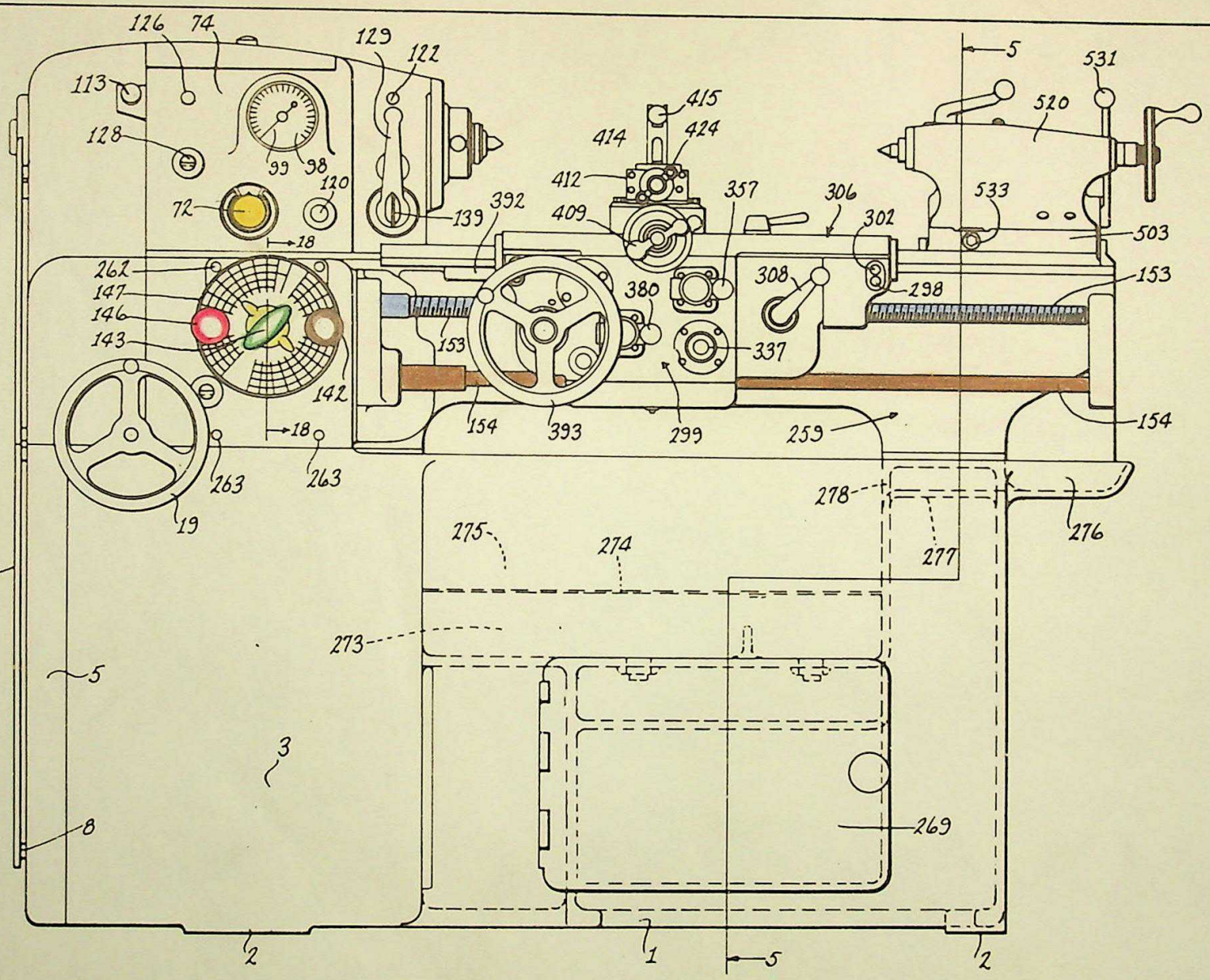

Fig. 1

INVENTOR
CLIFFORD A. BICKEL
BY
ATTORNEYS

302194
35 Sheets Sheet 1
35-57

Fig. 2

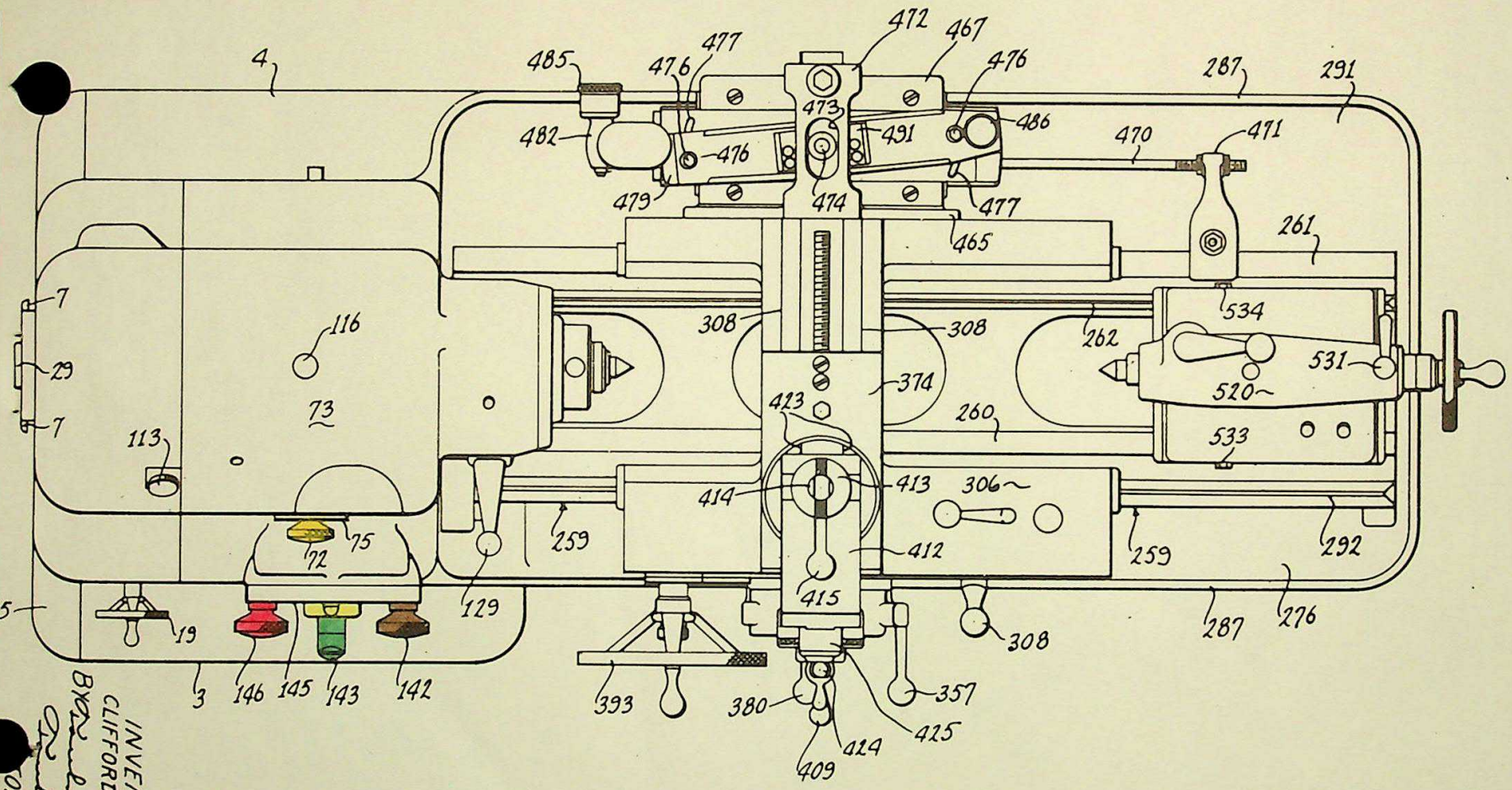

302194

3-Sheets Sheet 2

13

FIG. 3

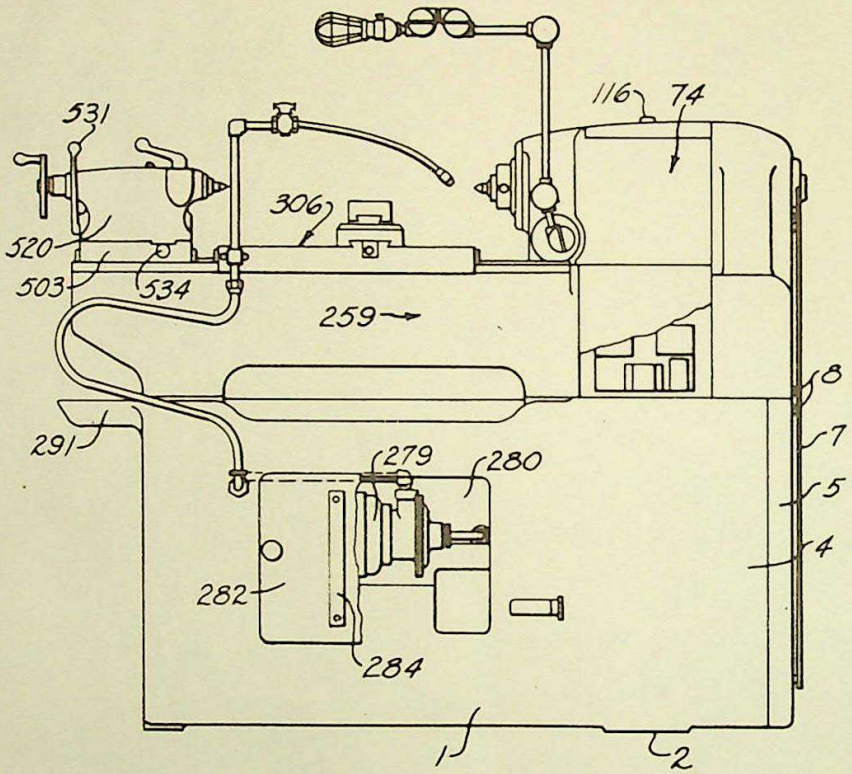

FIG. 4

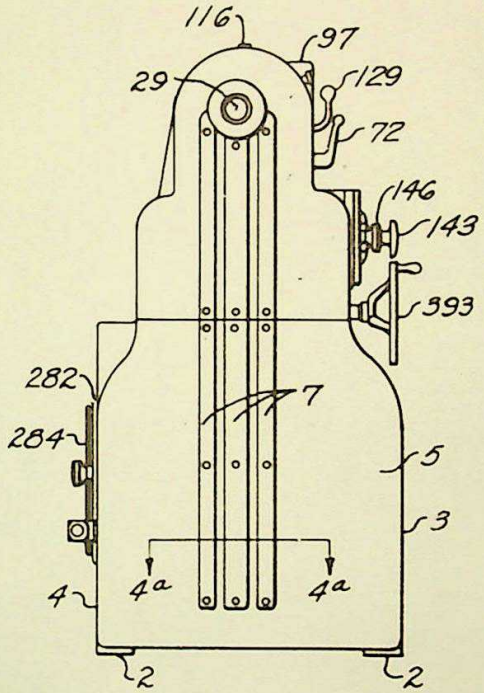

FIG. 4a

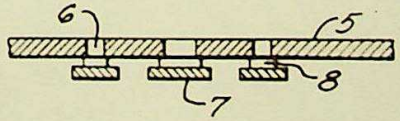

INVENTOR.
CLIFFORD A. BICKEL
BY
ATTORNEY.

302194

FIG. 5.

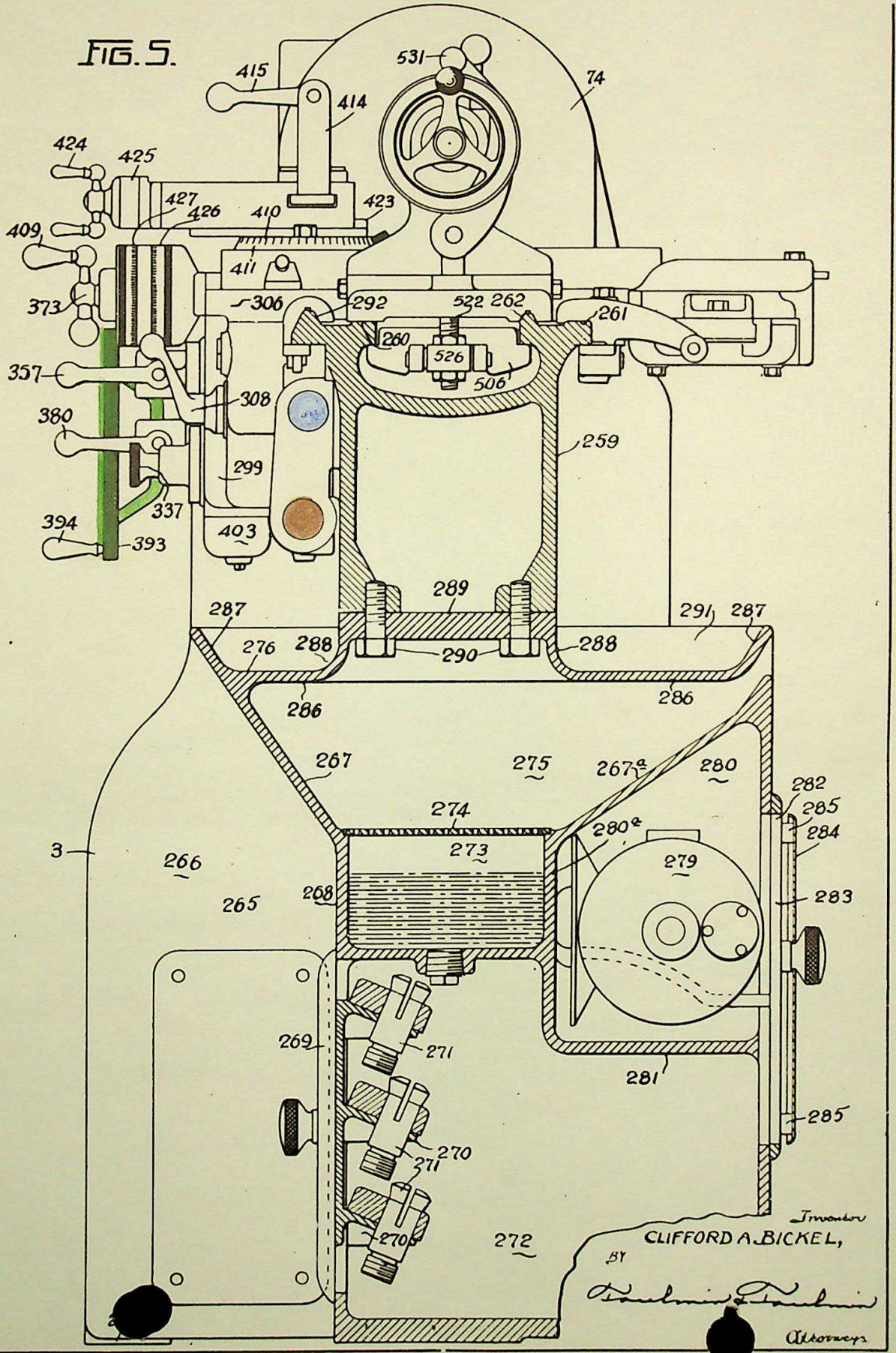
531
74
415
414
424
425
427
426
410
423
409
411
373
306
292
522
262
261
260
526
506
357
308
380
259
299
337
394
403
393
289
287
291
287
276
288
290
288
286
286
267
275
267a
280
282
285
284
274
280a
273
279
3
266
265
268
283
269
271
281
285
270
271
270
272
Inventor
CLIFFORD A. BICKEL,
BY
Attorneys

Fig. 6

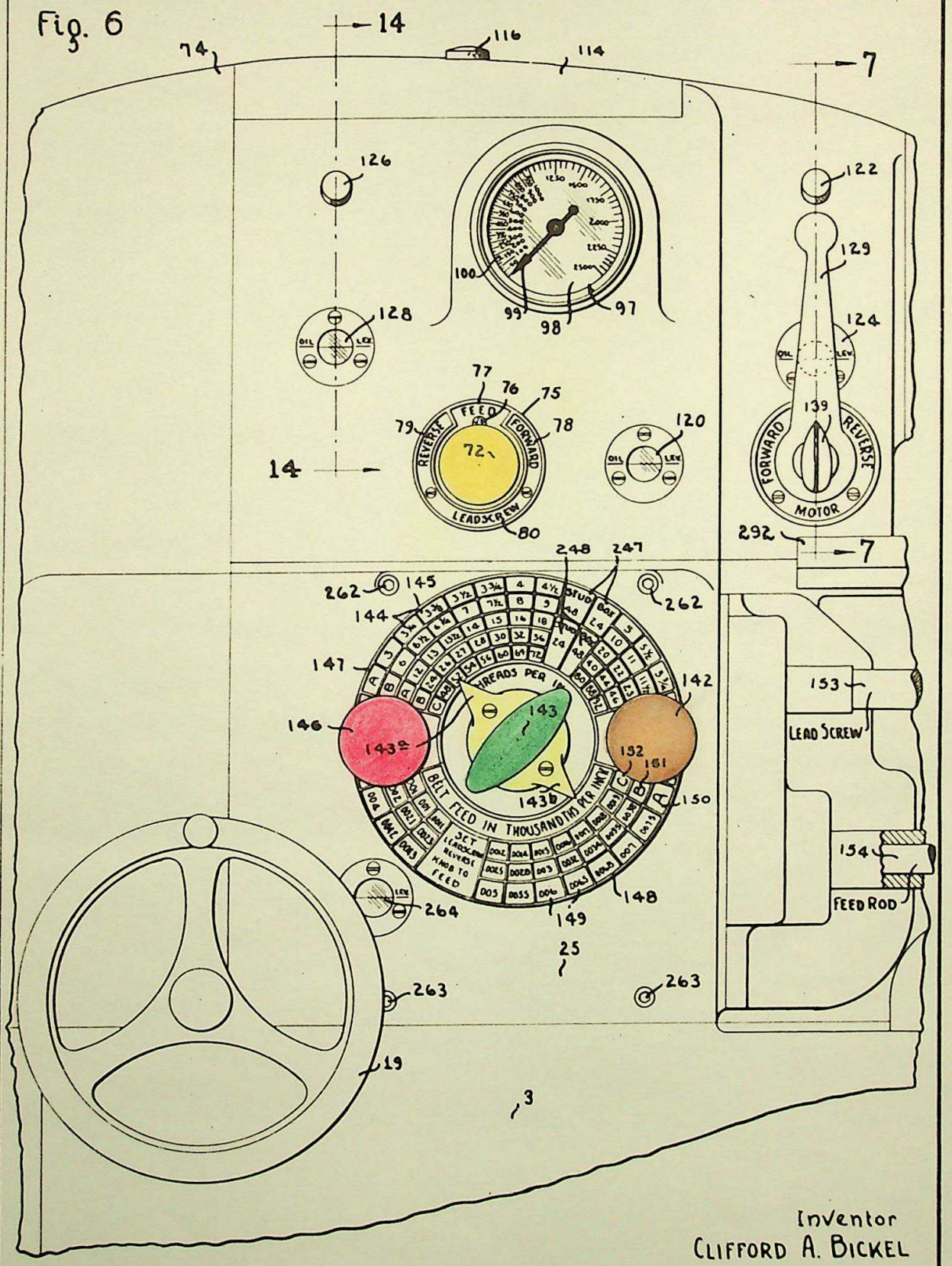

Inventor
CLIFFORD A. BICKEL

by

Attorneys

Fig. 7

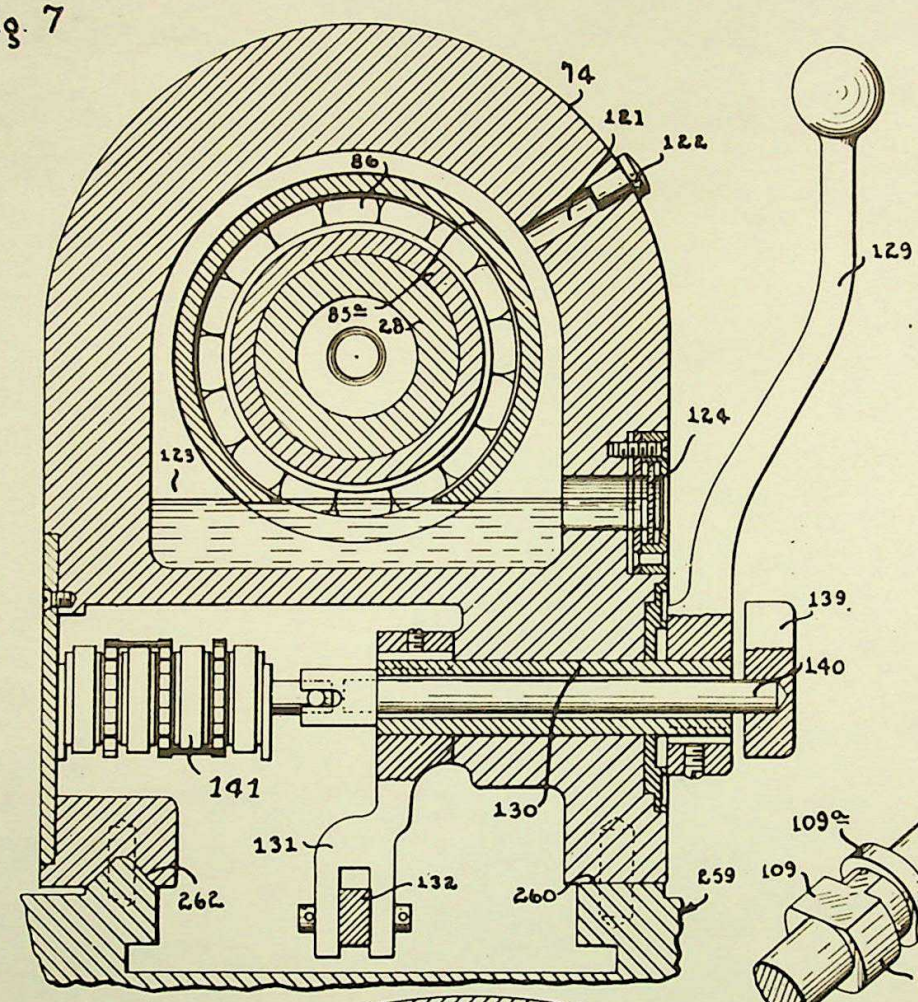

Fig. 9

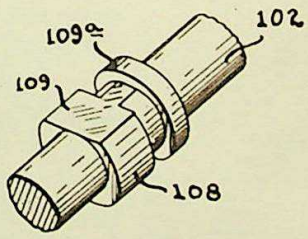

Fig. 8

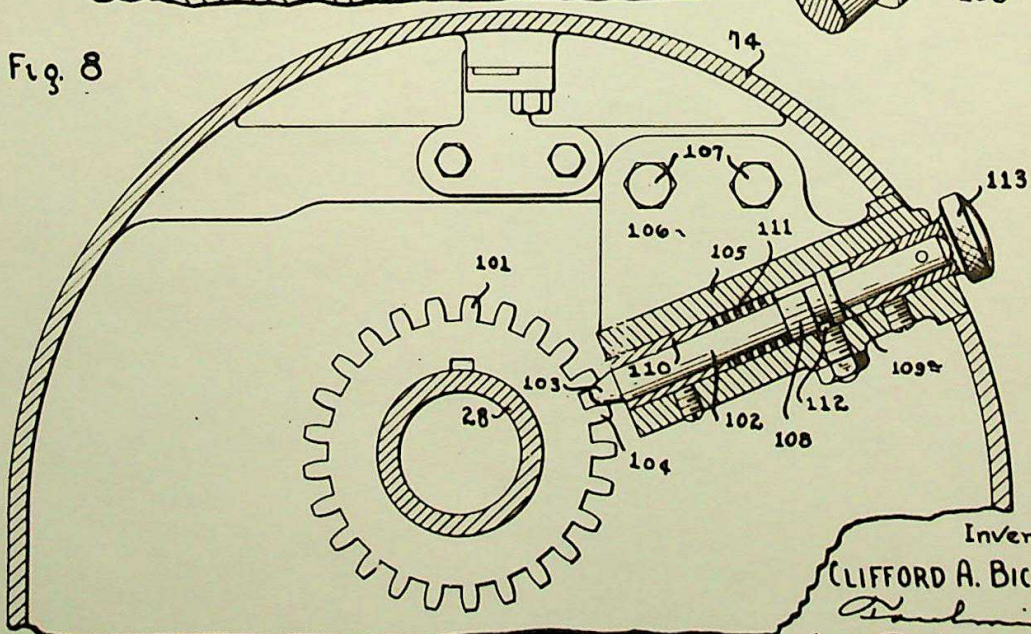

Inventor
CLIFFORD A. BICKEL
by
Attorneys

Fig. 10

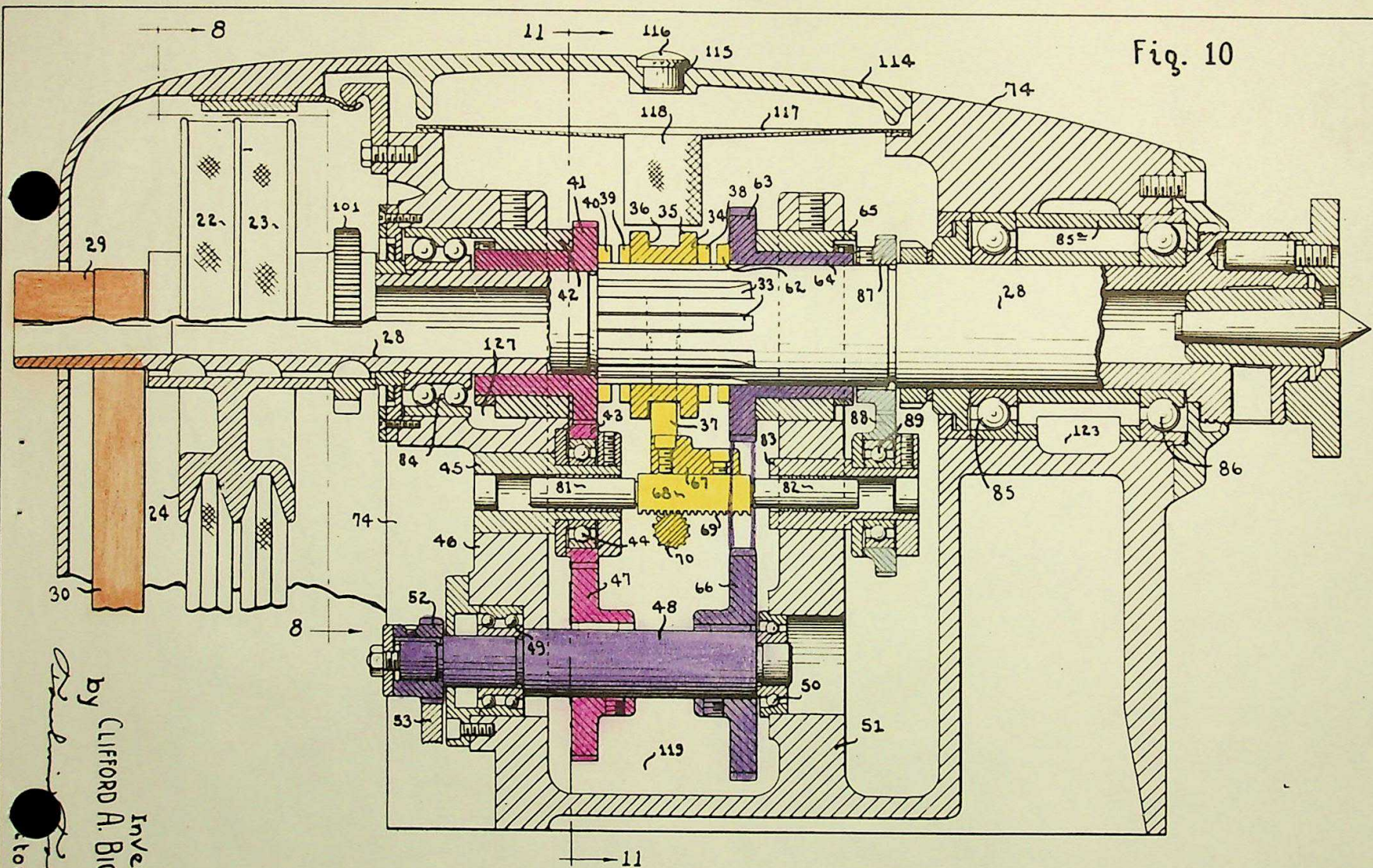

Inventor
by CLIFFORD A. BICKEL

Attorneys

Fig. 11

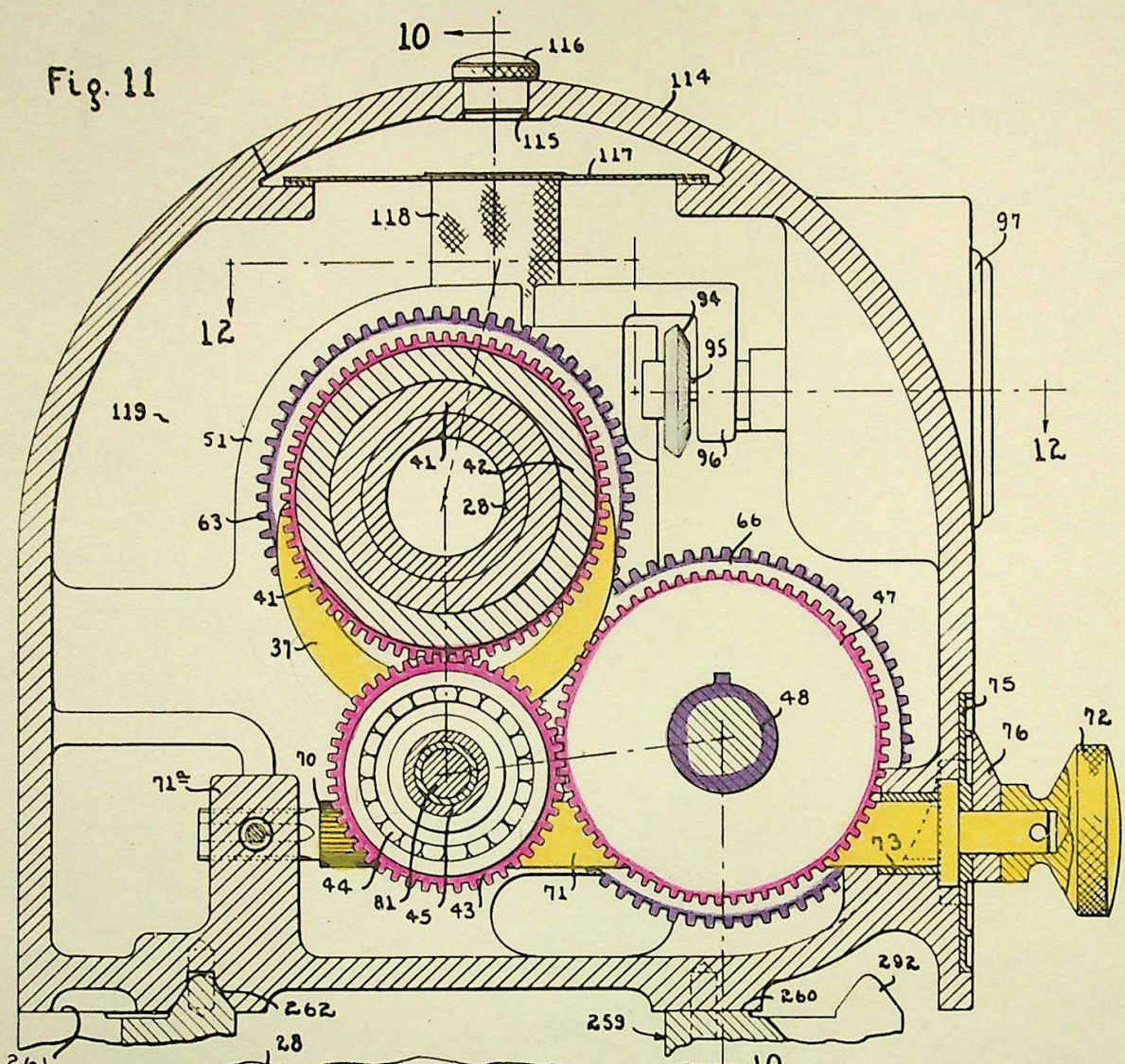

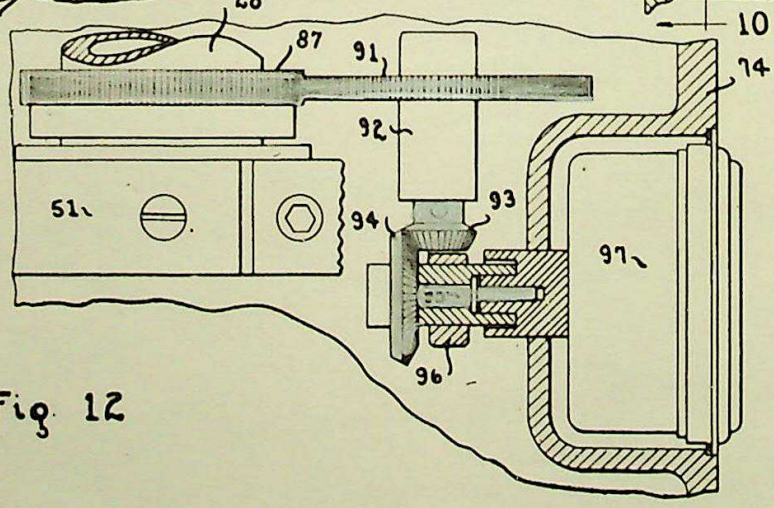

Fig. 12

Inventor
CLIFFORD A. BICKEL
by
Attorneys

Fig. 13

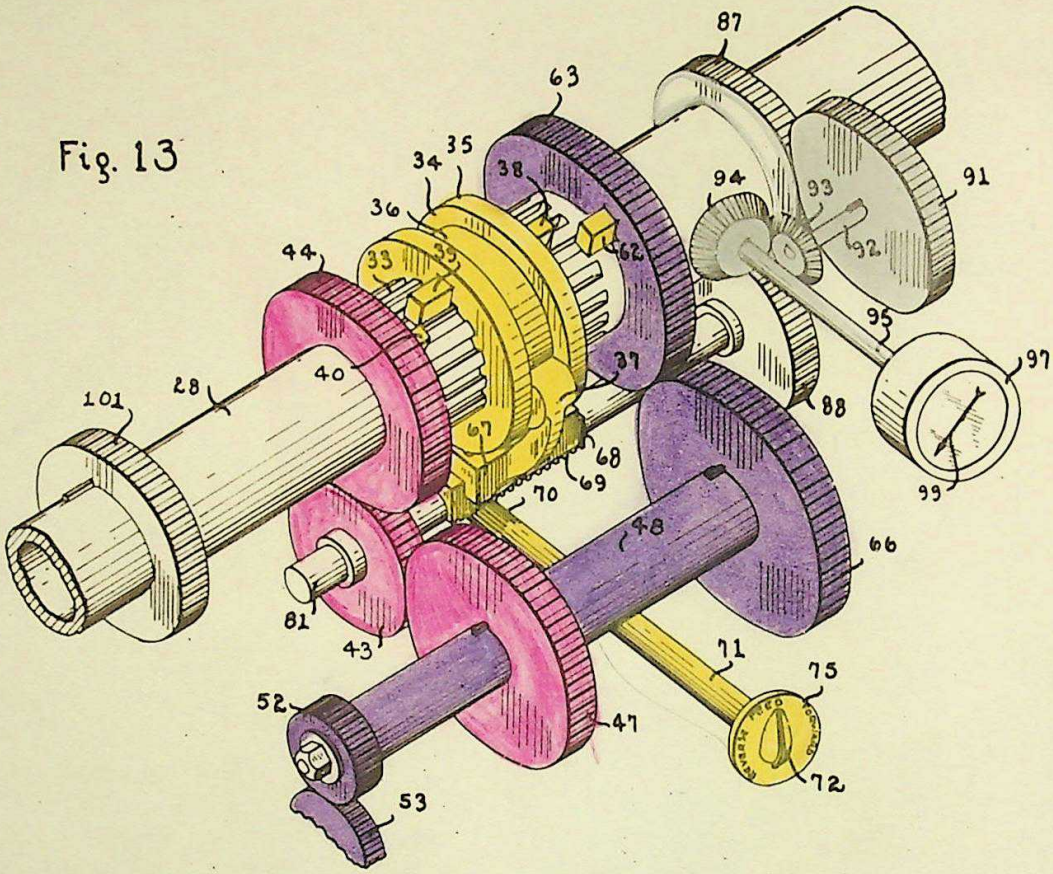

Fig. 14

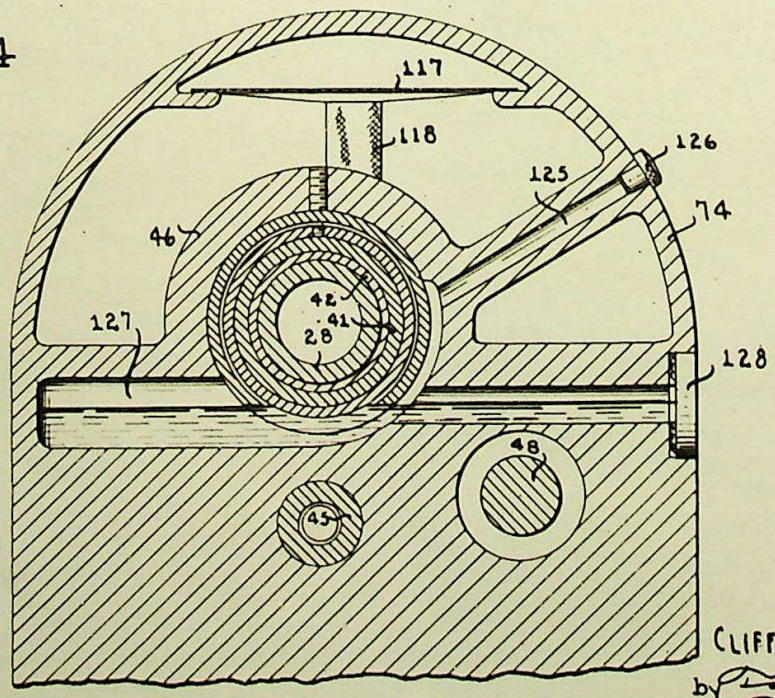

Inventor
CLIFFORD A. BICKEL
by [illegible]
Attorneys

Fig. 15

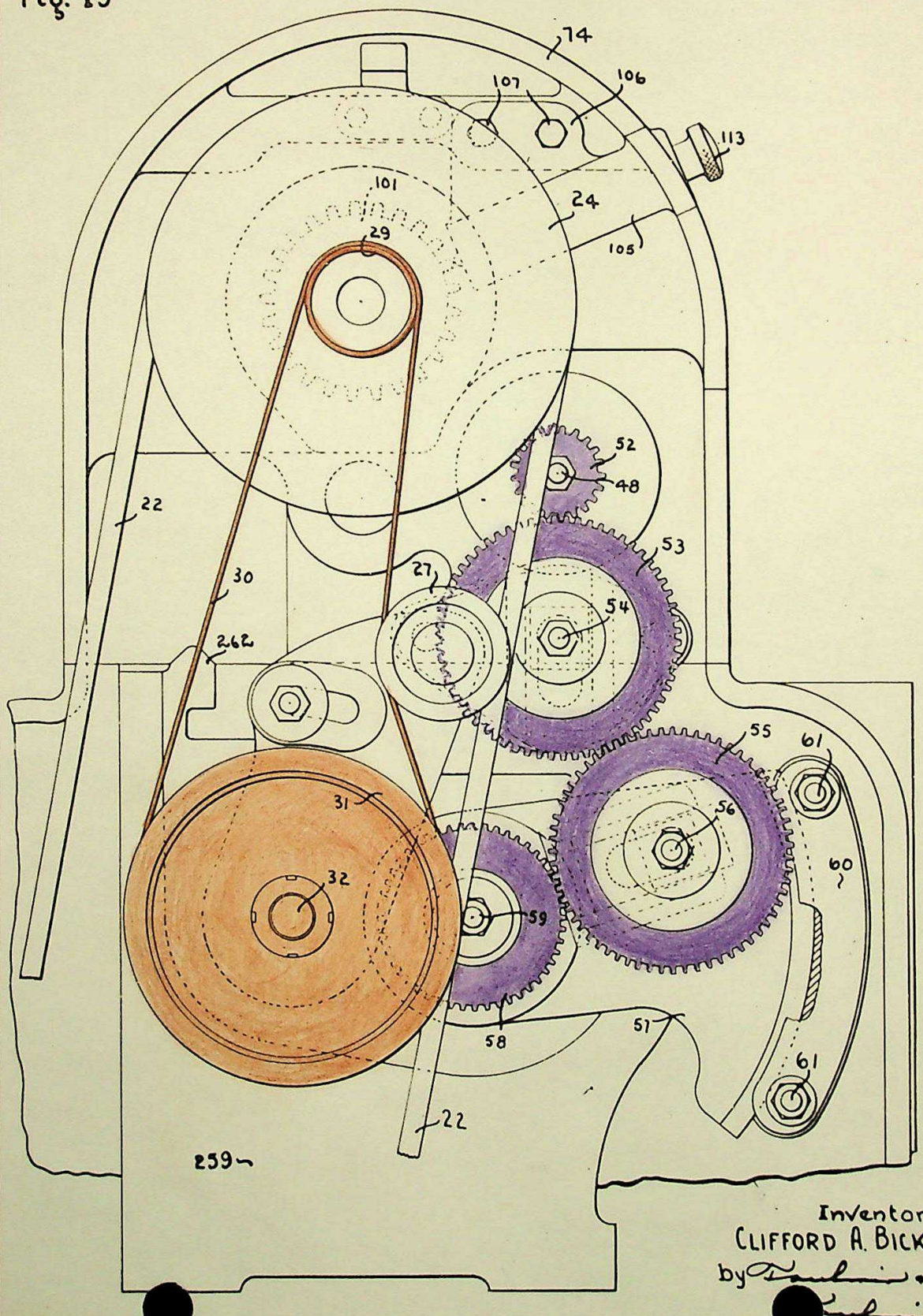

Inventor
CLIFFORD A. BICKEL
by
Attorneys

Fig. 16

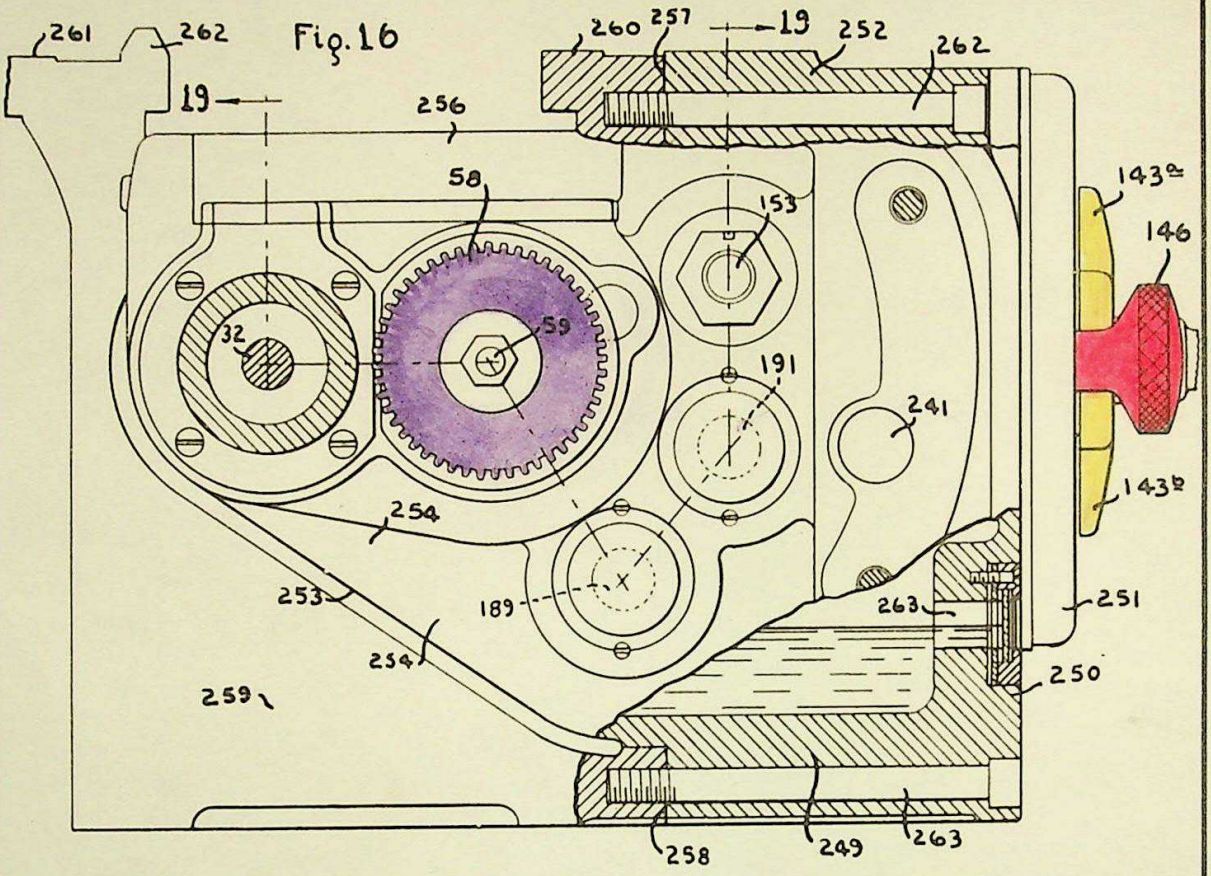

Fig. 17

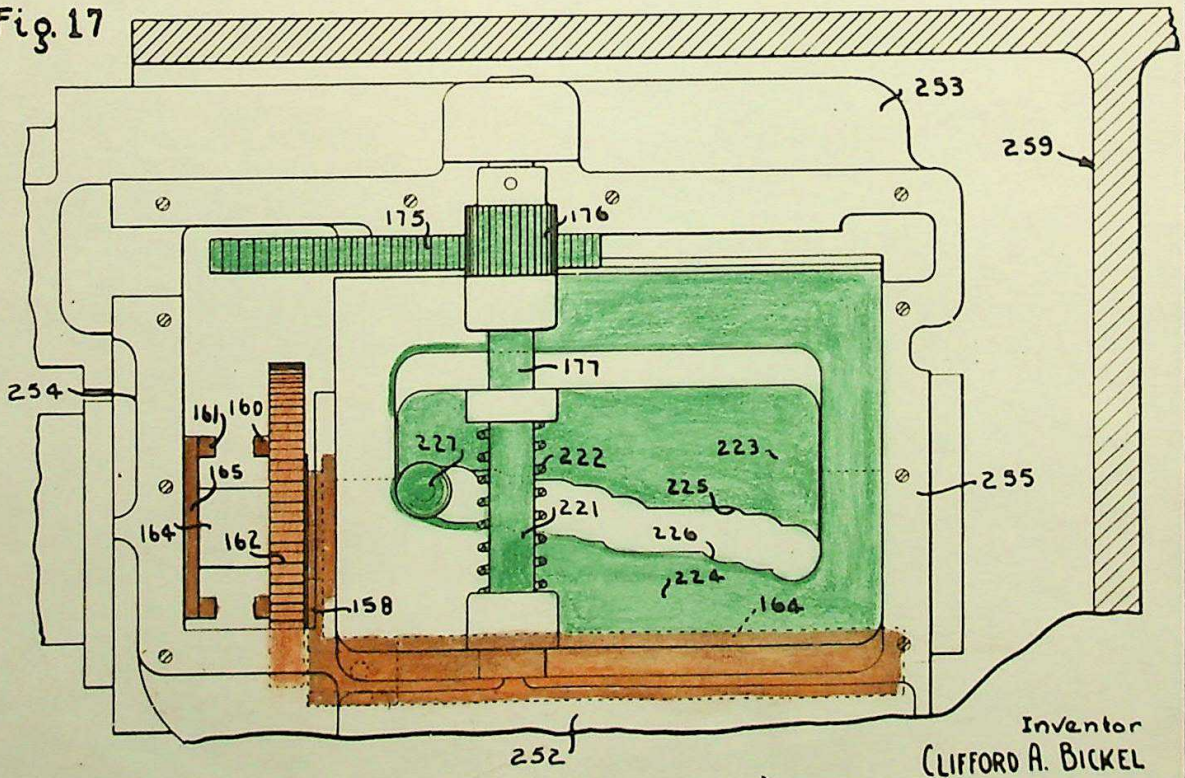

Inventor
CLIFFORD A. BICKEL

by

Attorneys

FIG. 18.

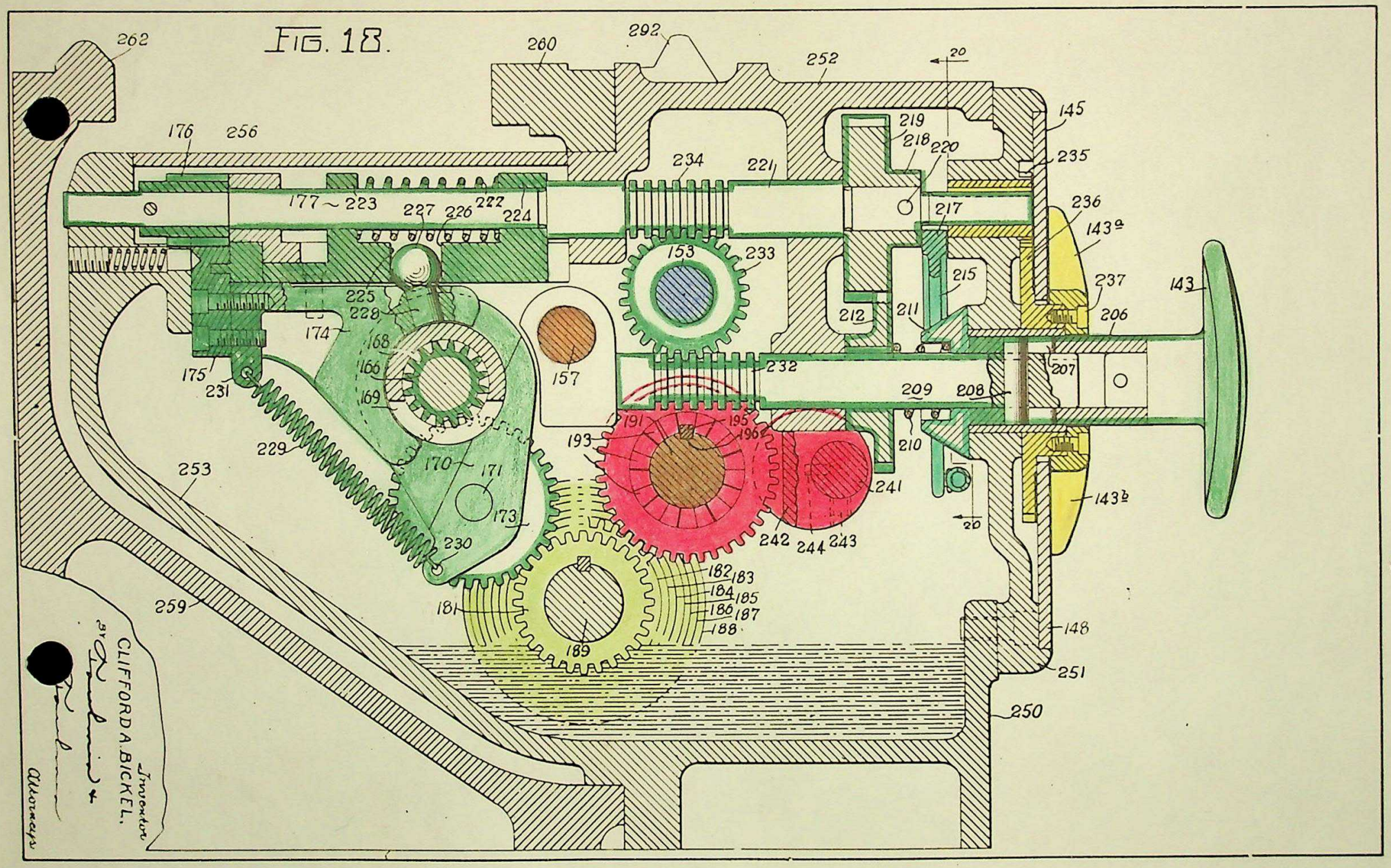
262
260
292
252
20
145
219
218
220
235
176
256
234
221
236
177
223
227
226
222
224
217
143a
153
233
237
143
215
225
228
212
211
206
174
168
166
169
157
232
207
175
231
209
208
191
195
196
193
210
229
170
171
241
143b
253
173
242
244
243
20
230
182
183
184
185
186
187
188
181
259
189
148
251
250
Inventor
CLIFFORD A. BICKEL,
By
Attorneys

FIG. 19.

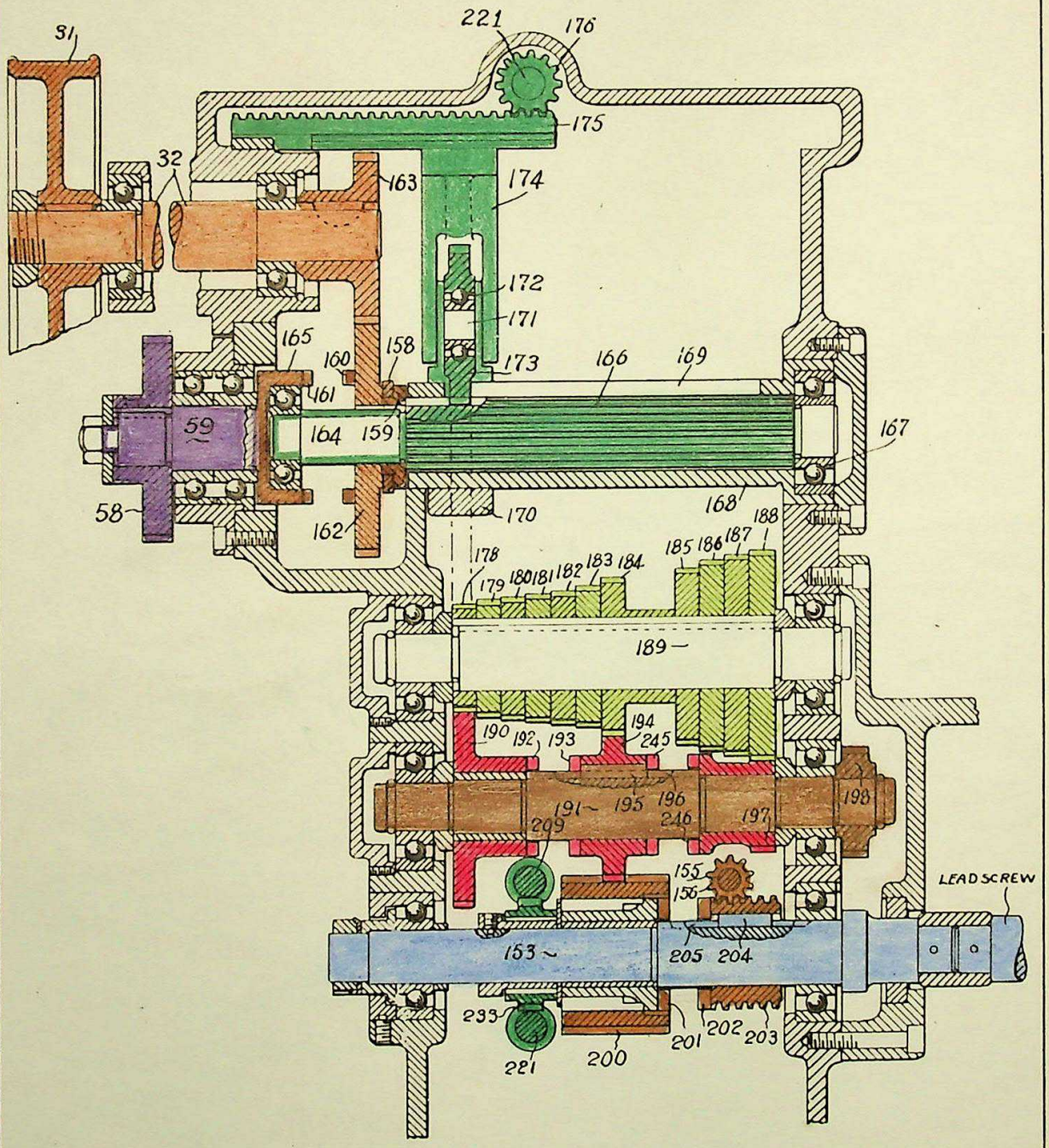

Inventor
CLIFFORD A. BICKEL,
BY
Attorney

Fig. 20

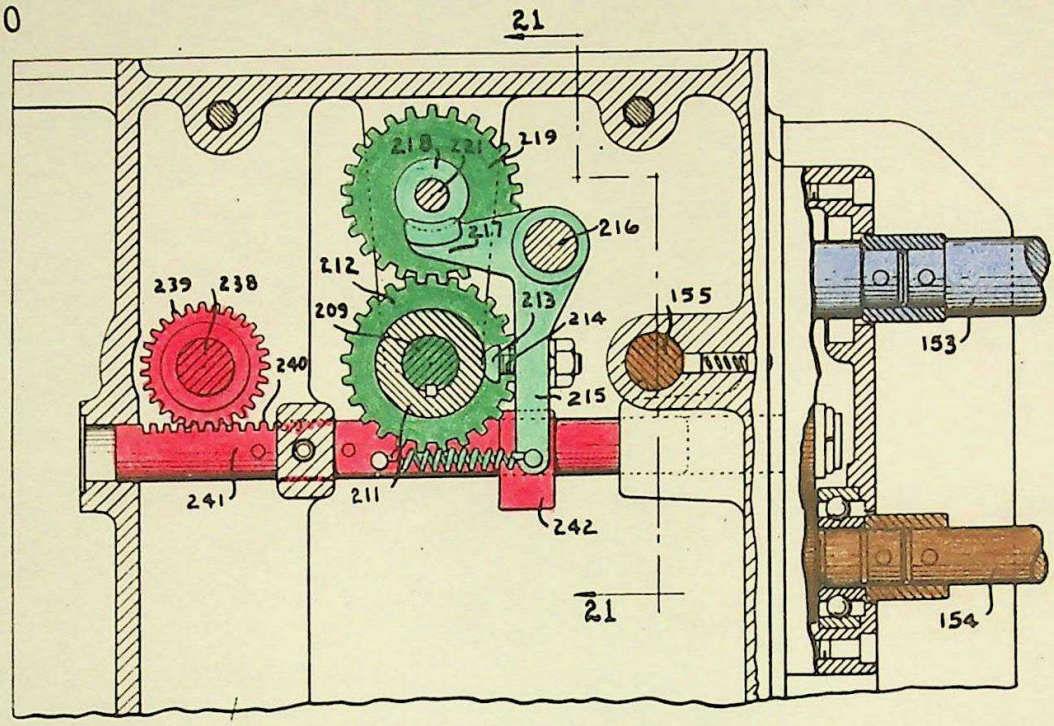

Fig. 21

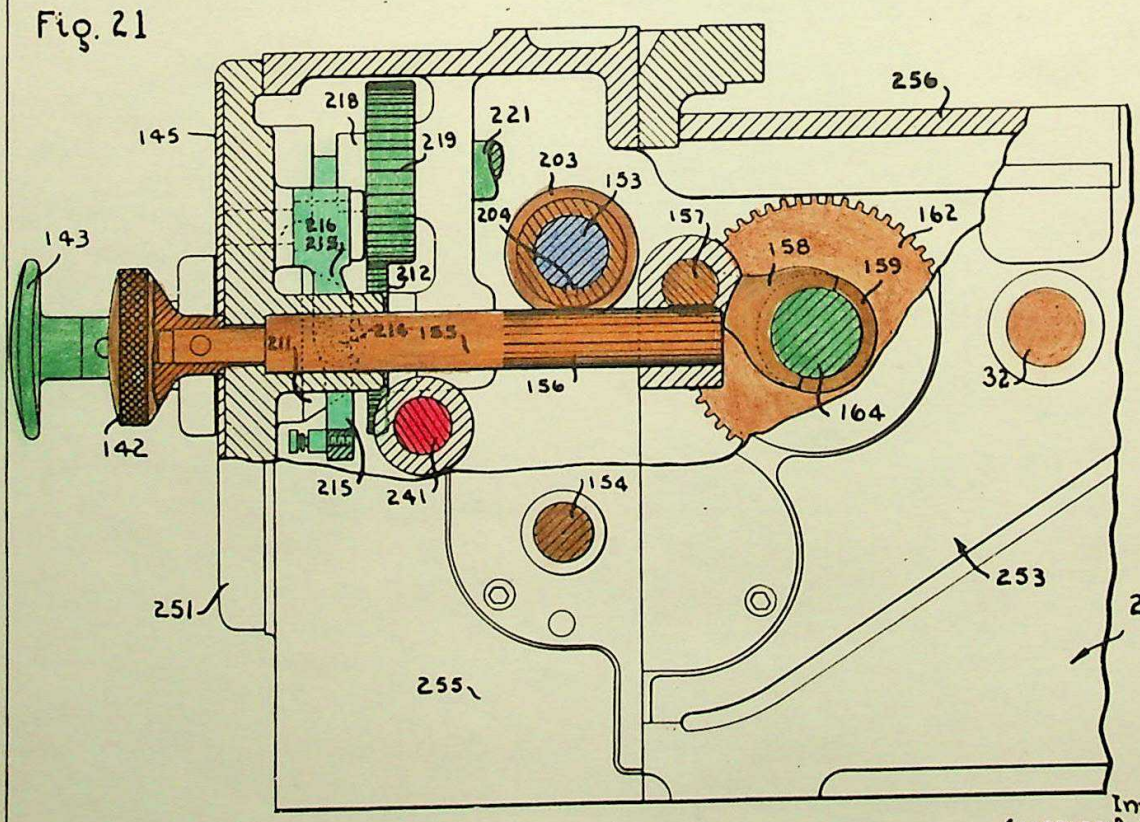

Inventor
CLIFFORD A. BICKEL

Attorneys

FIG. 22

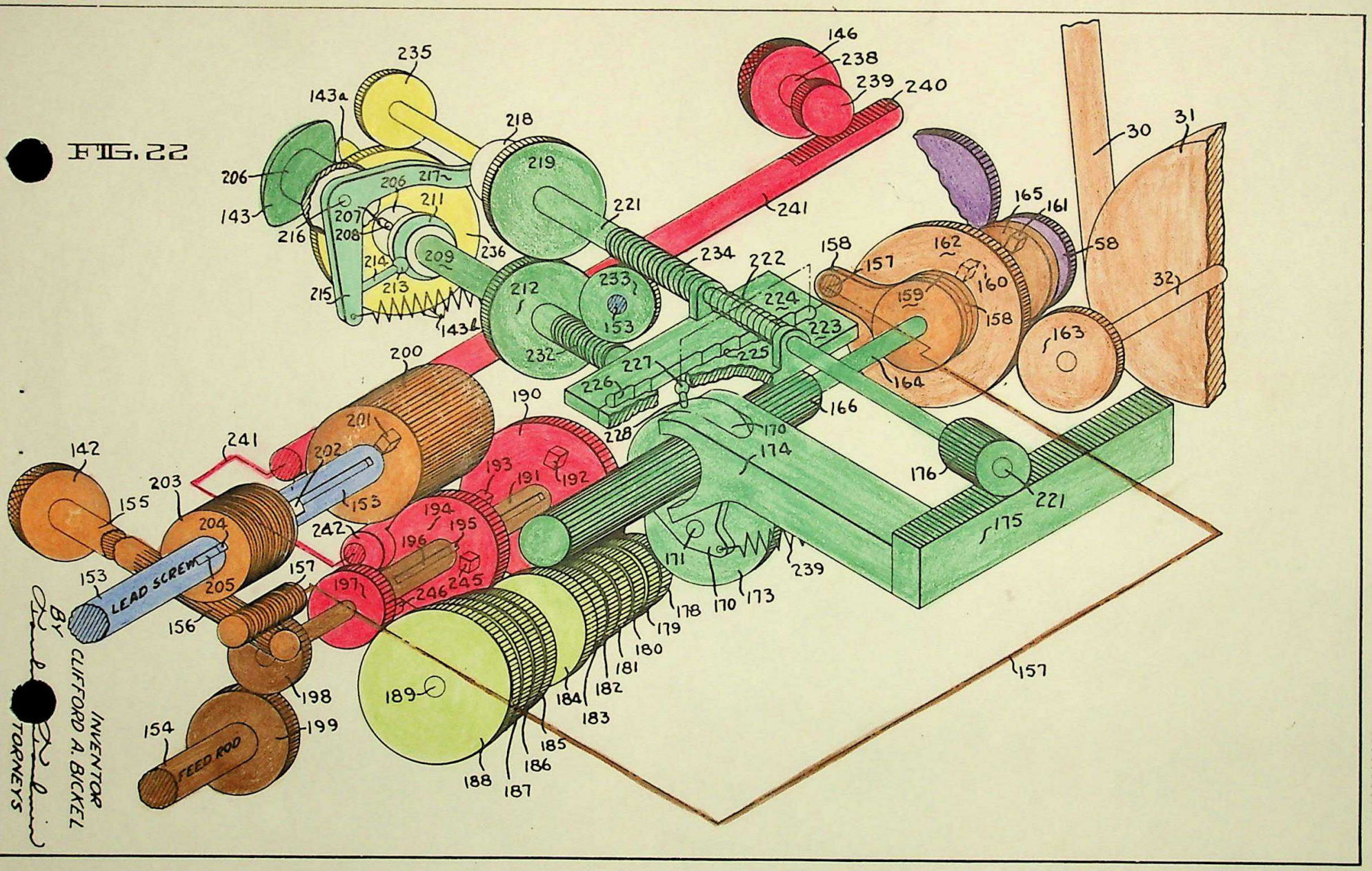

INVENTOR
CLIFFORD A. BICKEL
BY
ATTORNEYS

Fig. 23

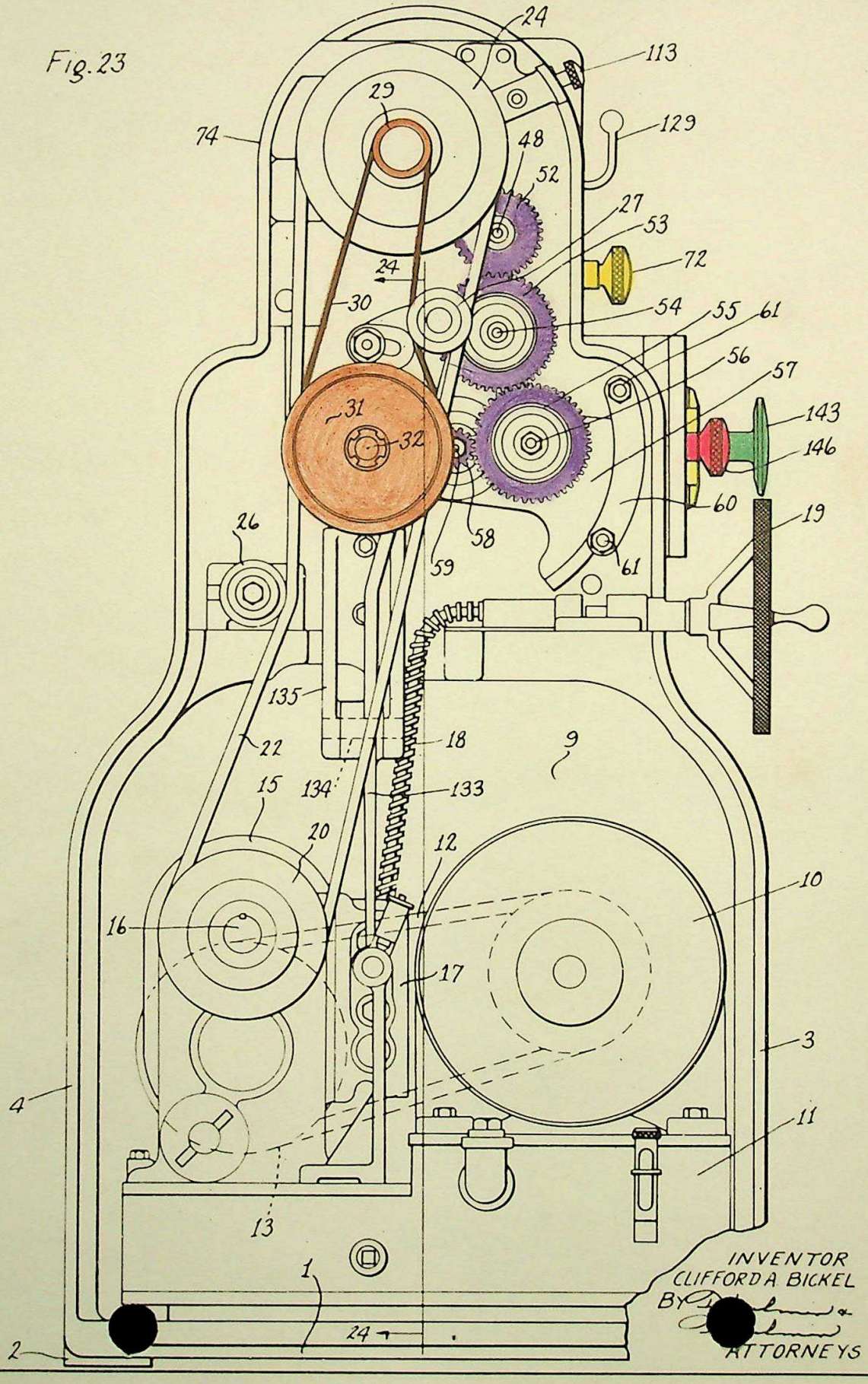

INVENTOR
CLIFFORD A. BICKEL
BY
ATTORNEYS

Fig. 24

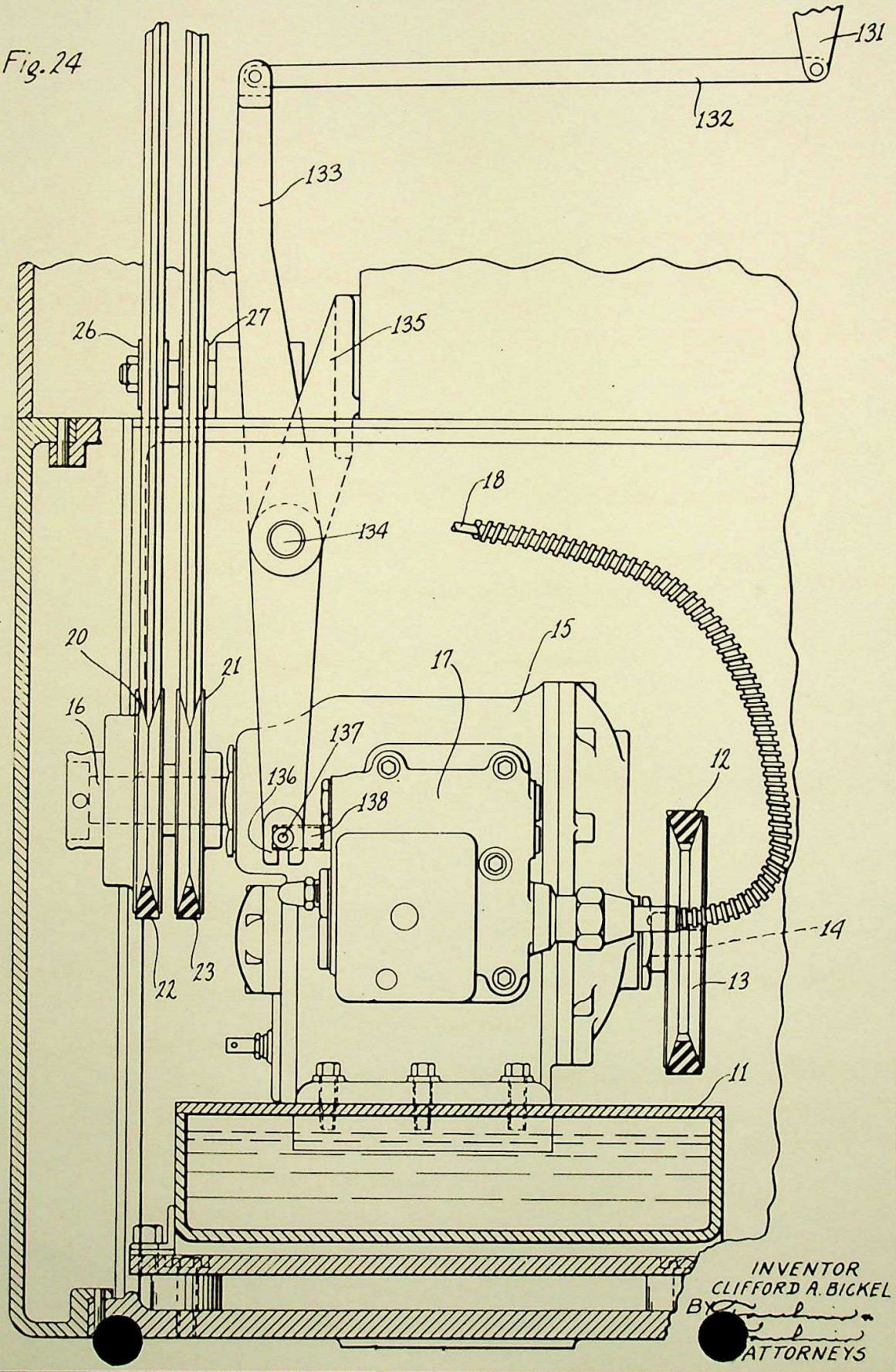

INVENTOR
CLIFFORD A. BICKEL
BY
ATTORNEYS

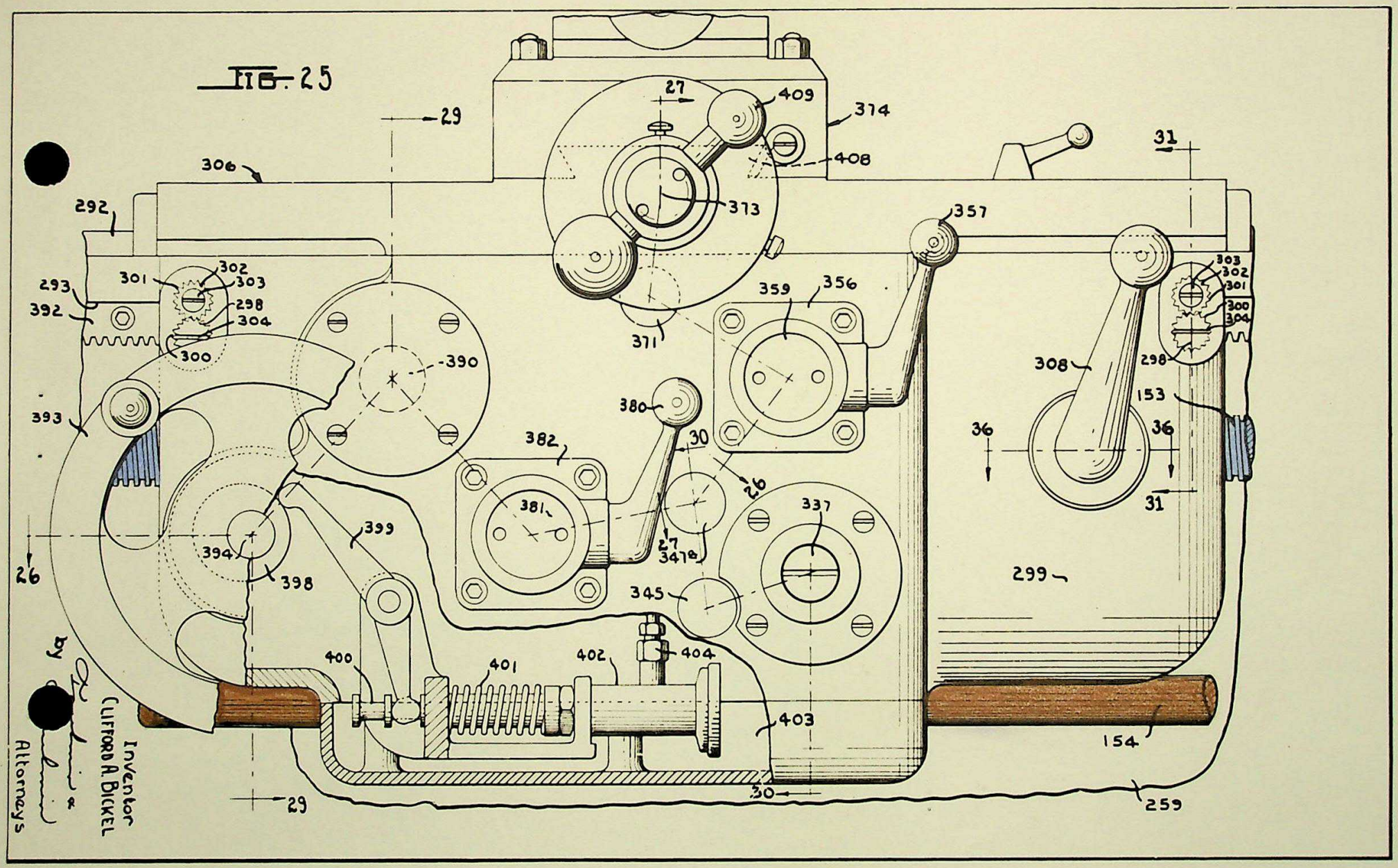
FIG. 25
29
27
409
374
408
31
306
292
313
357
293
301
302
303
298
304
300
392
359
356
371
390
308
153
393
380
30
382
36
26
381
337
399
394
398
27
347a
299
345
400
401
402
404
403
154
259
29
30
Inventor
CLIFFORD A. BICKEL
by
Attorneys

FIG. 26

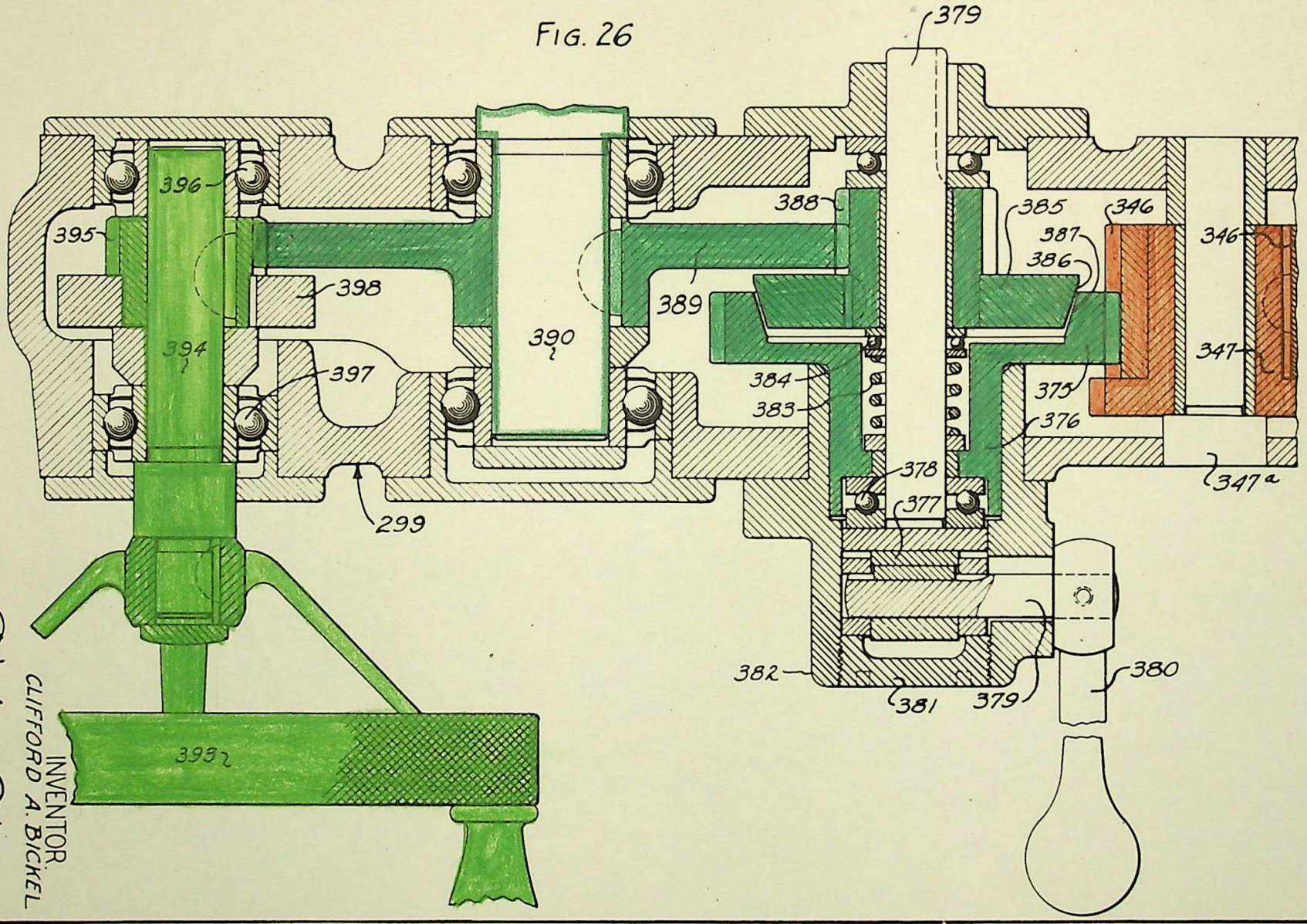

INVENTOR.
CLIFFORD A. BICKEL
ATTORNEYS

FIG. 27

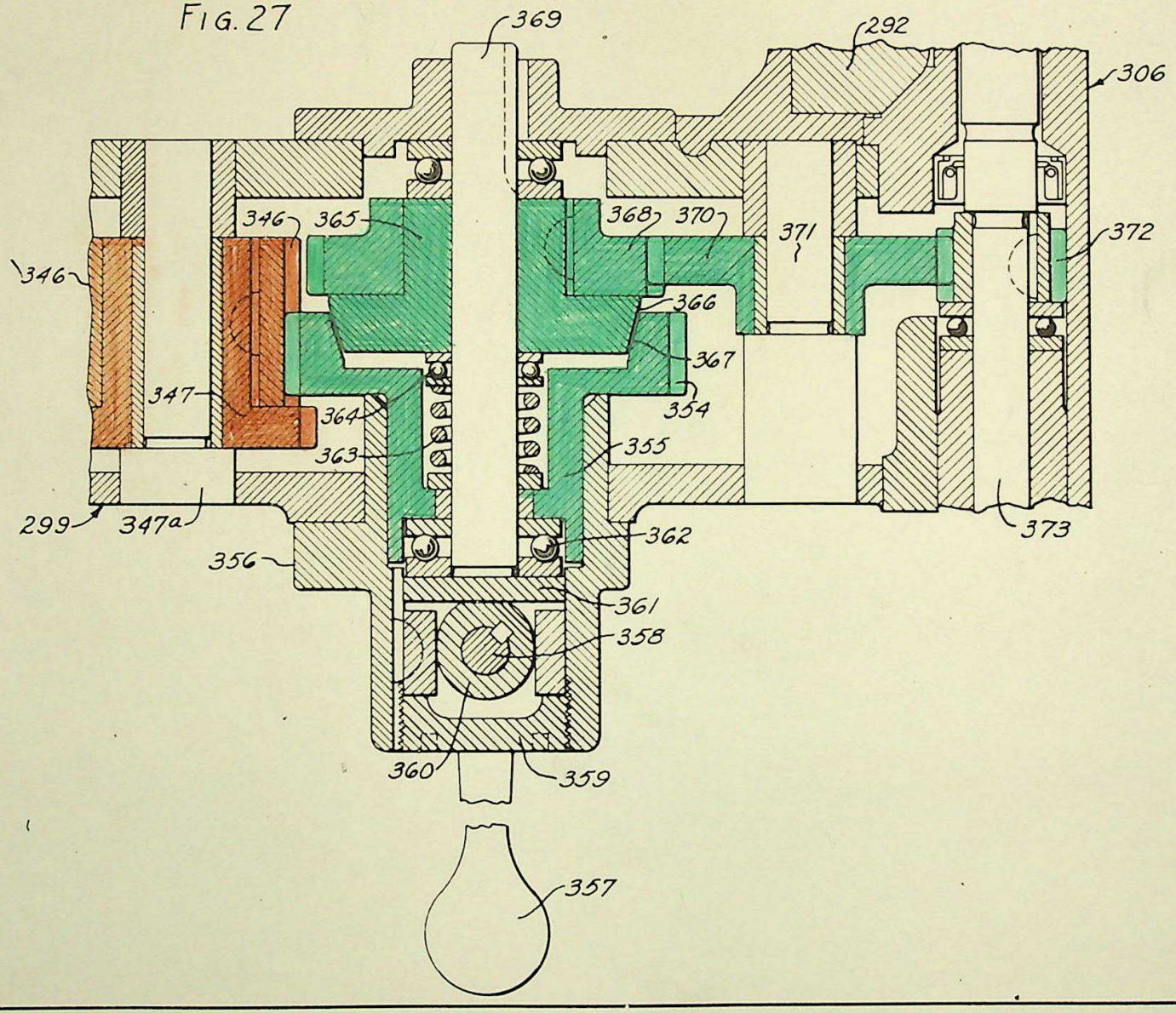

INVENTOR.
CLIFFORD A. BICKEL
BY
ATTORNEYS

302194

FIG. 28

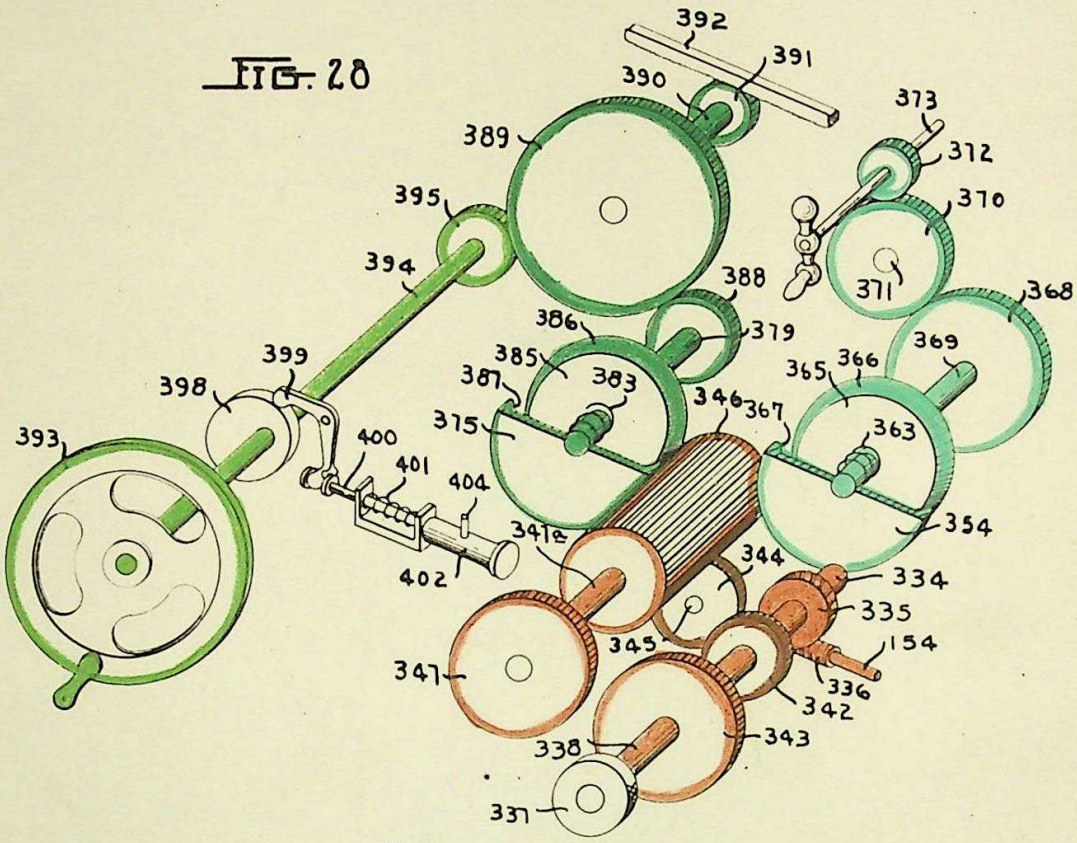

FIG. 29

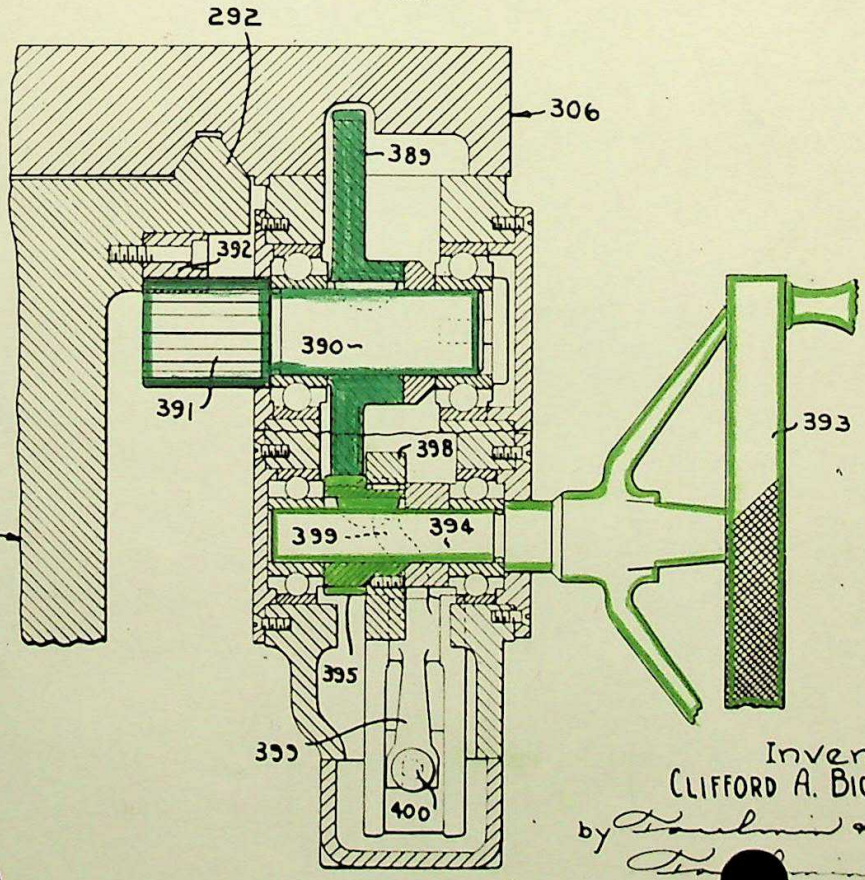

Inventor
CLIFFORD A. BICKEL
by [illegible]
[illegible]
Attorneys

FIG. 30.

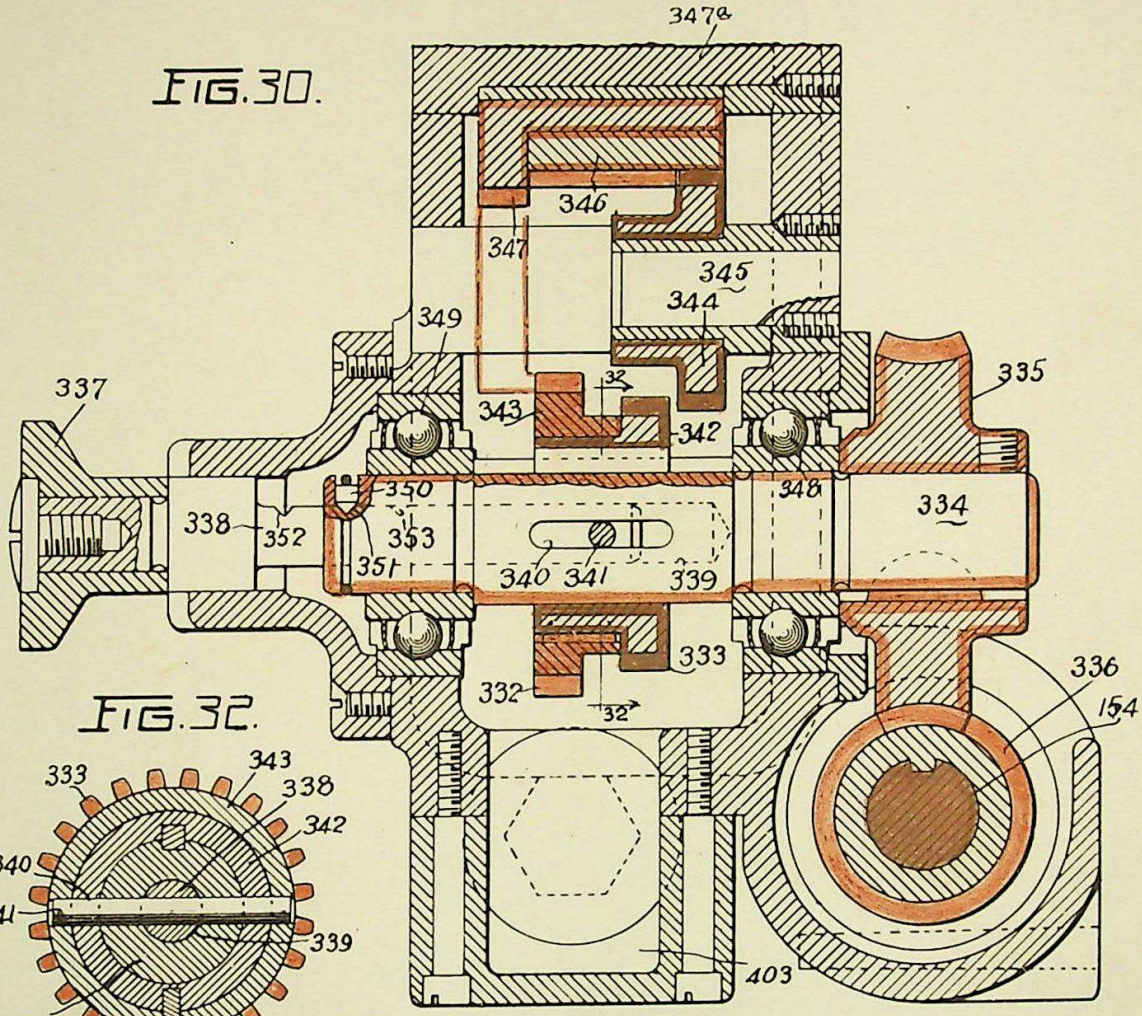

FIG. 32.

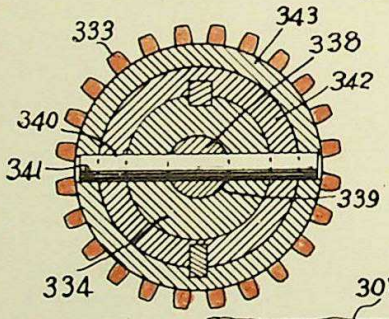

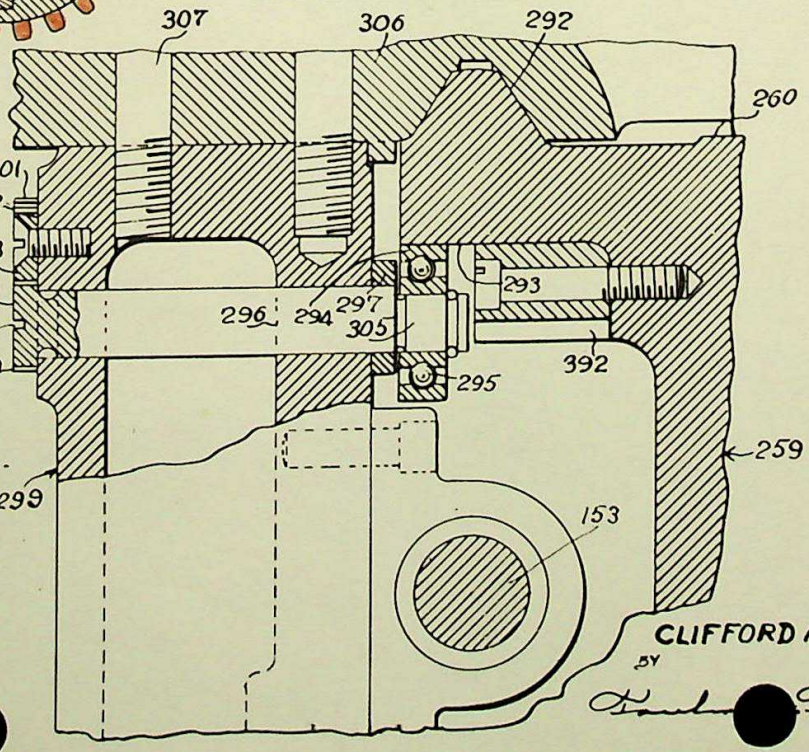

FIG. 31.

Inventor
CLIFFORD A. BICKEL,
BY
Attorneys

Fig. 33

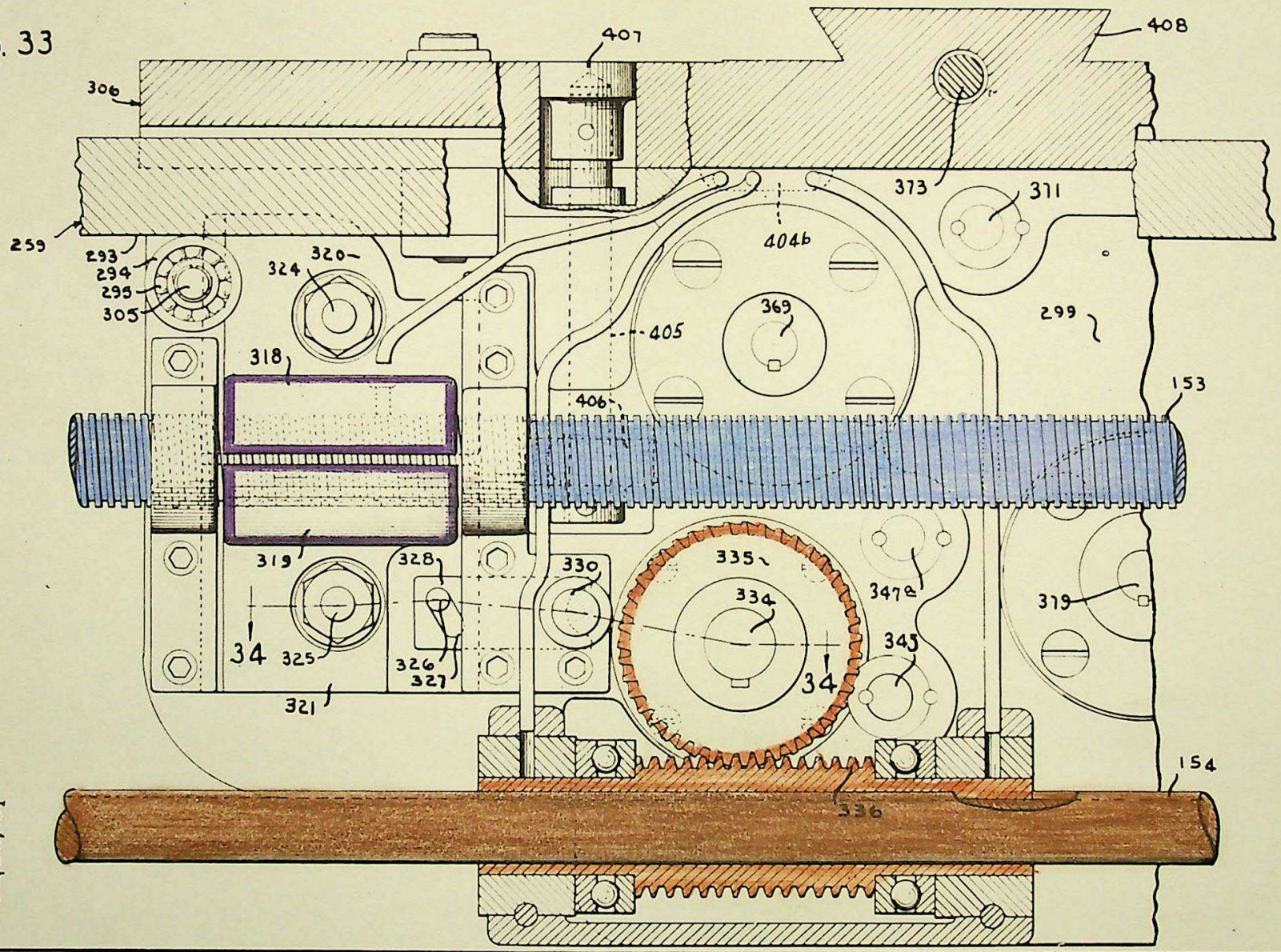

Inventor
CLIFFORD A. BICKEL
by
Attorneys

302194

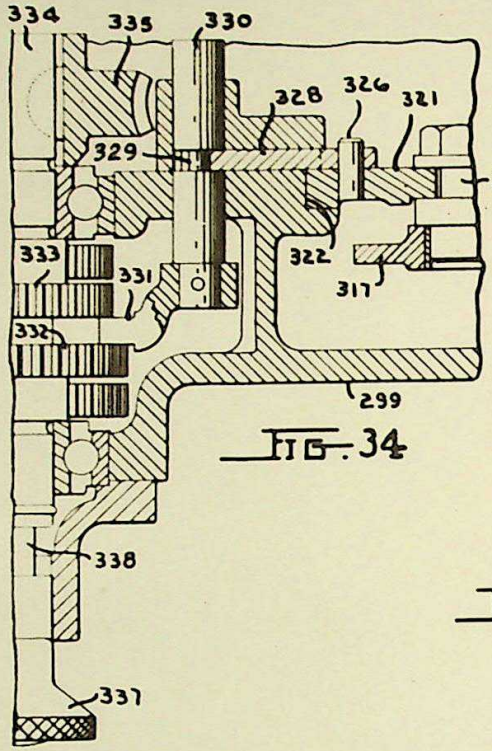

FIG. 34

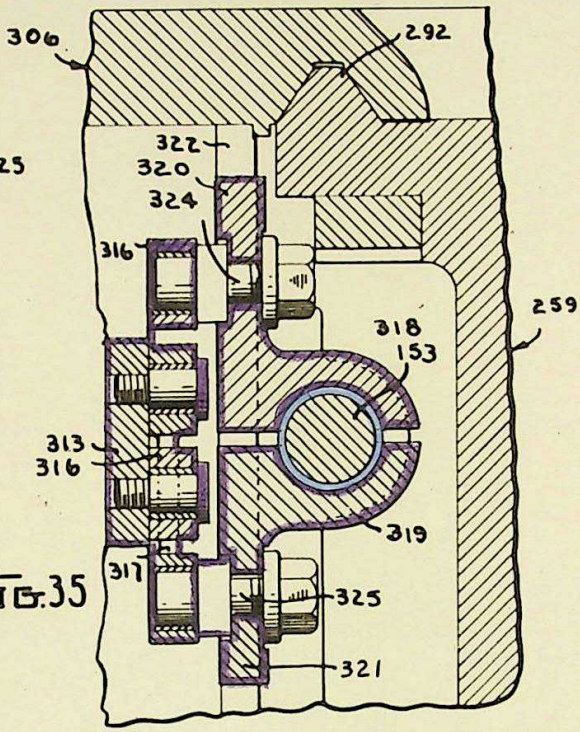

FIG. 35

FIG. 36

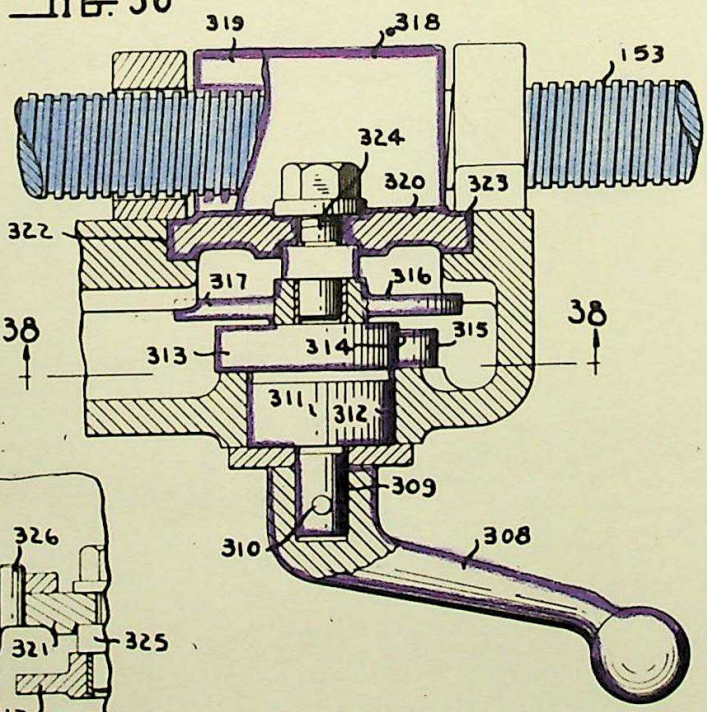

FIG. 37

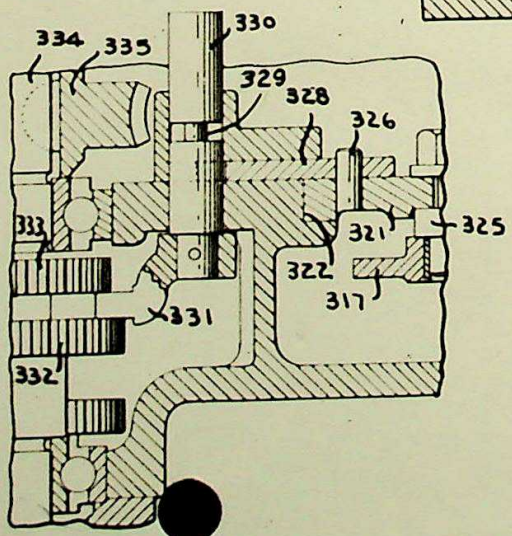

Inventor
CLIFFORD A. BICKEL
by
Attorneys

FIG. 38

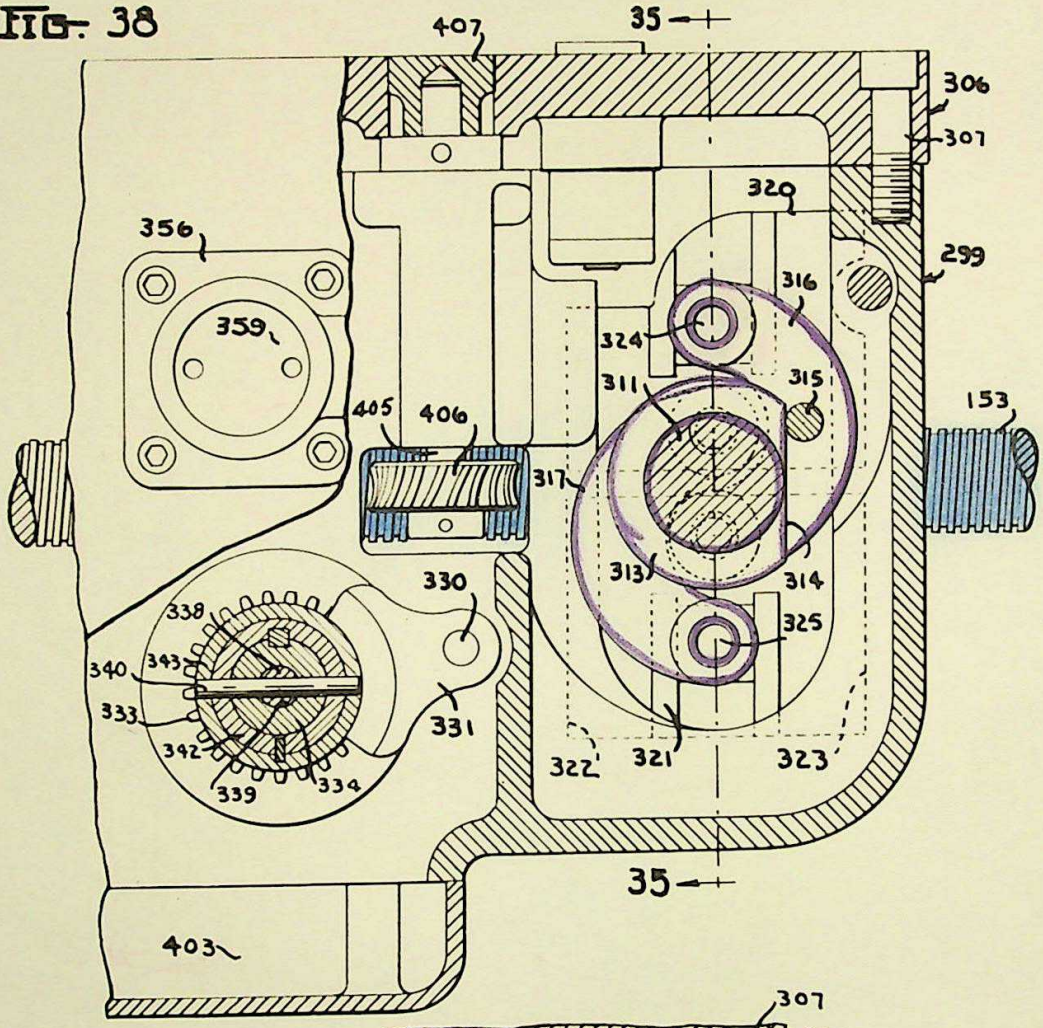

FIG. 39

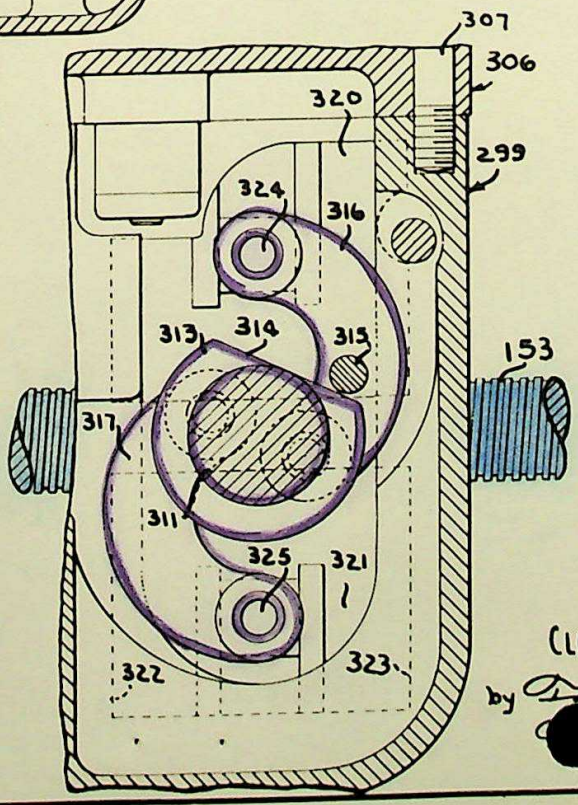

Inventor
CLIFFORD A. BICKEL
by
Attorneys

Fig. 40

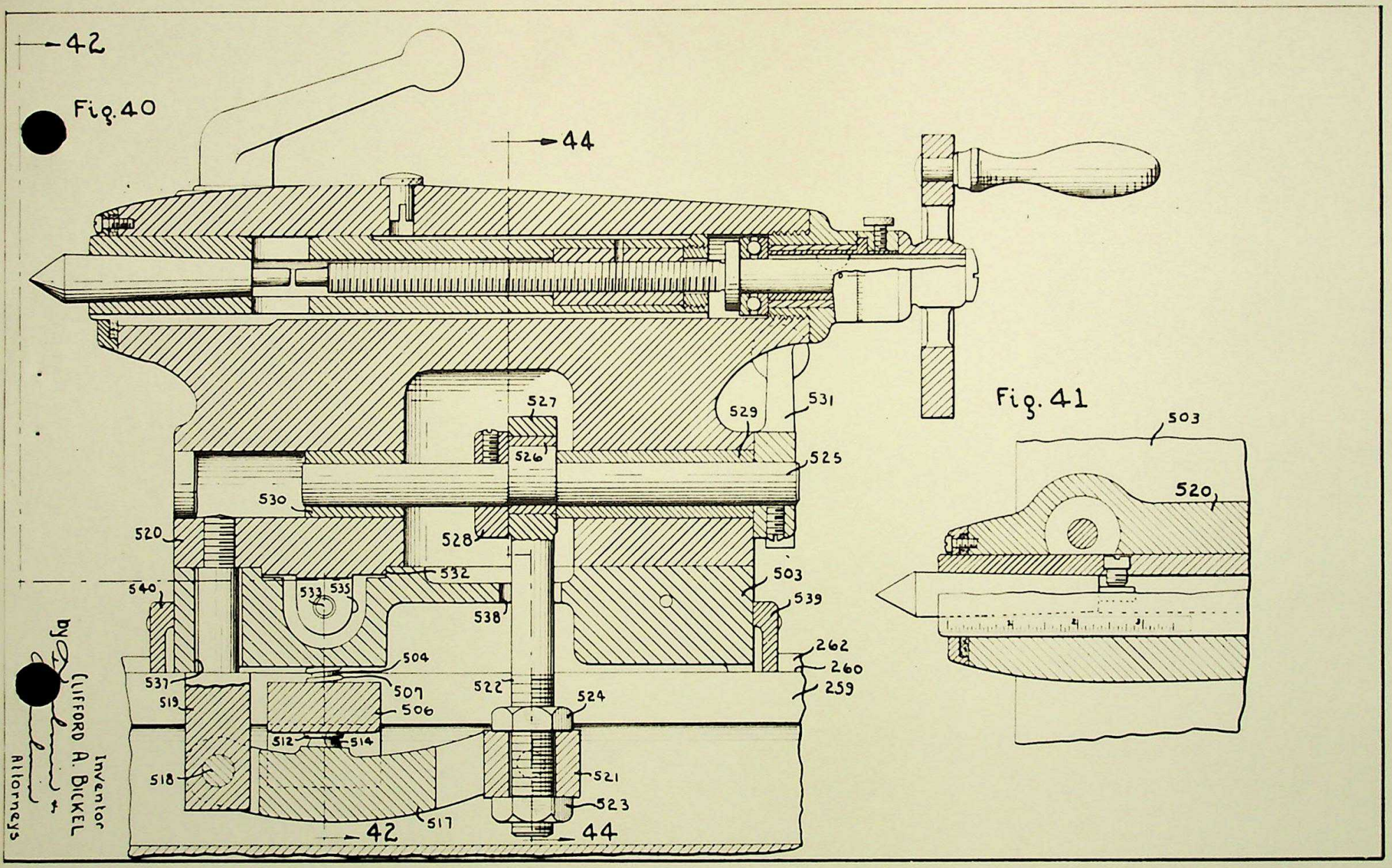

Fig. 41

Inventor
CLIFFORD A. BICKEL
by
Attorneys

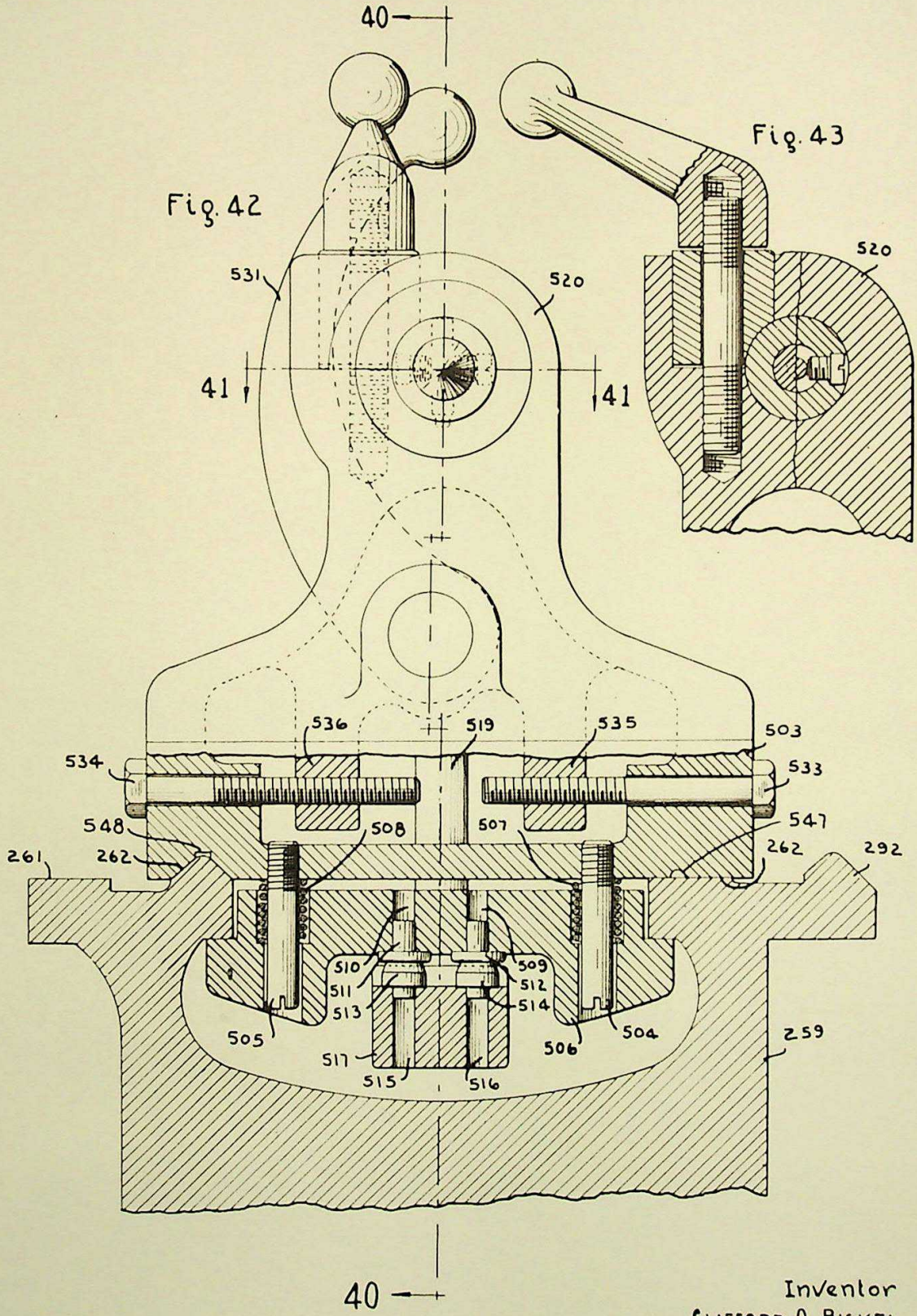

Inventor
CLIFFORD A. BICKEL
by
Attorneys

Fig. 44

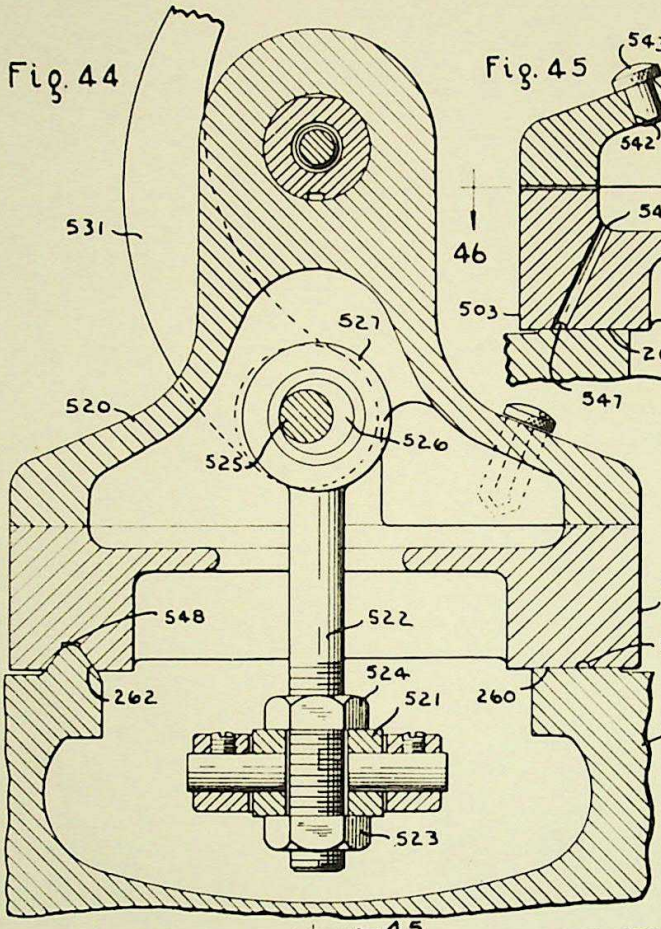

Fig. 45

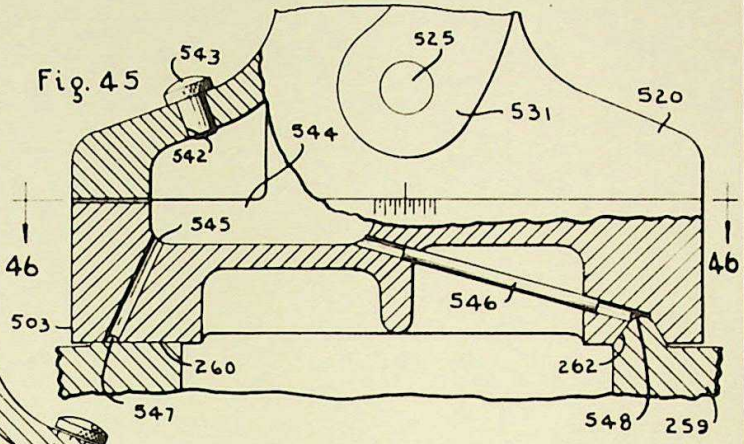

Fig. 46

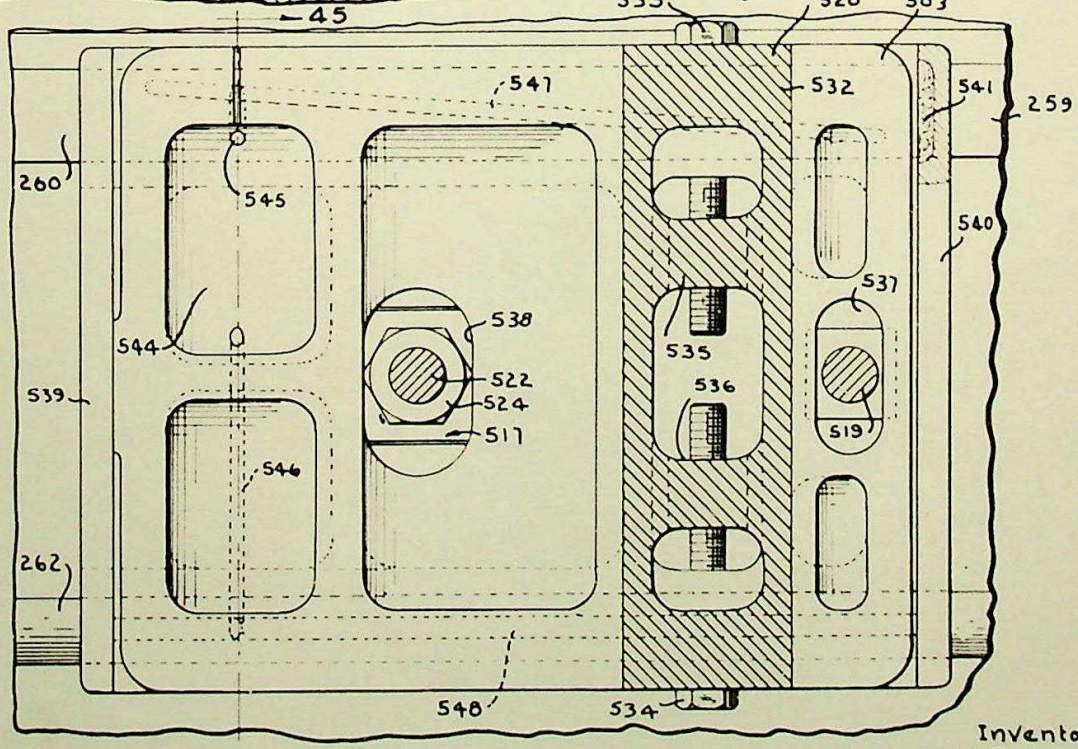

Inventor
CLIFFORD A. BICKEL
by
Attorneys

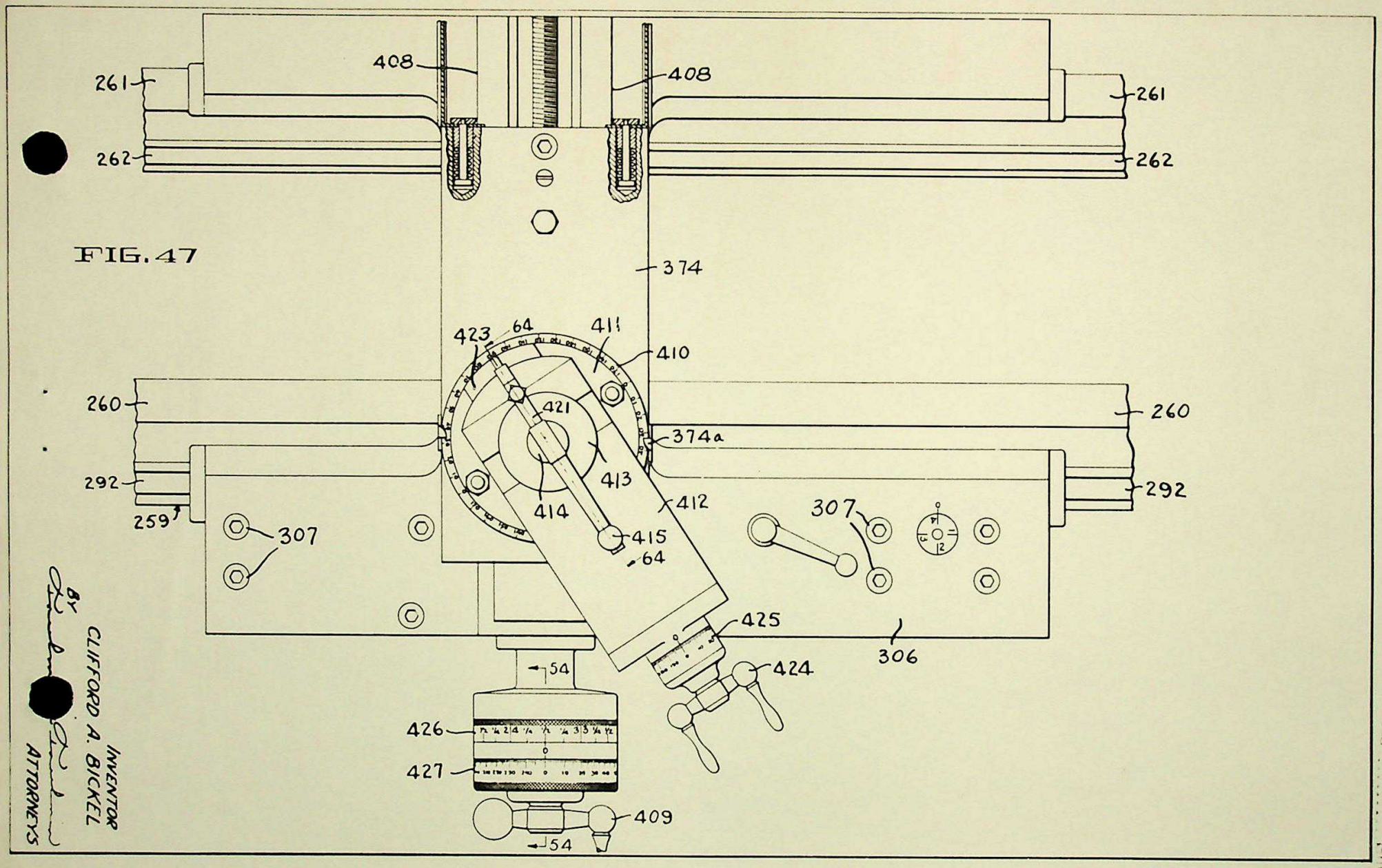

FIG. 47

INVENTOR
CLIFFORD A. BICKEL
BY
ATTORNEYS

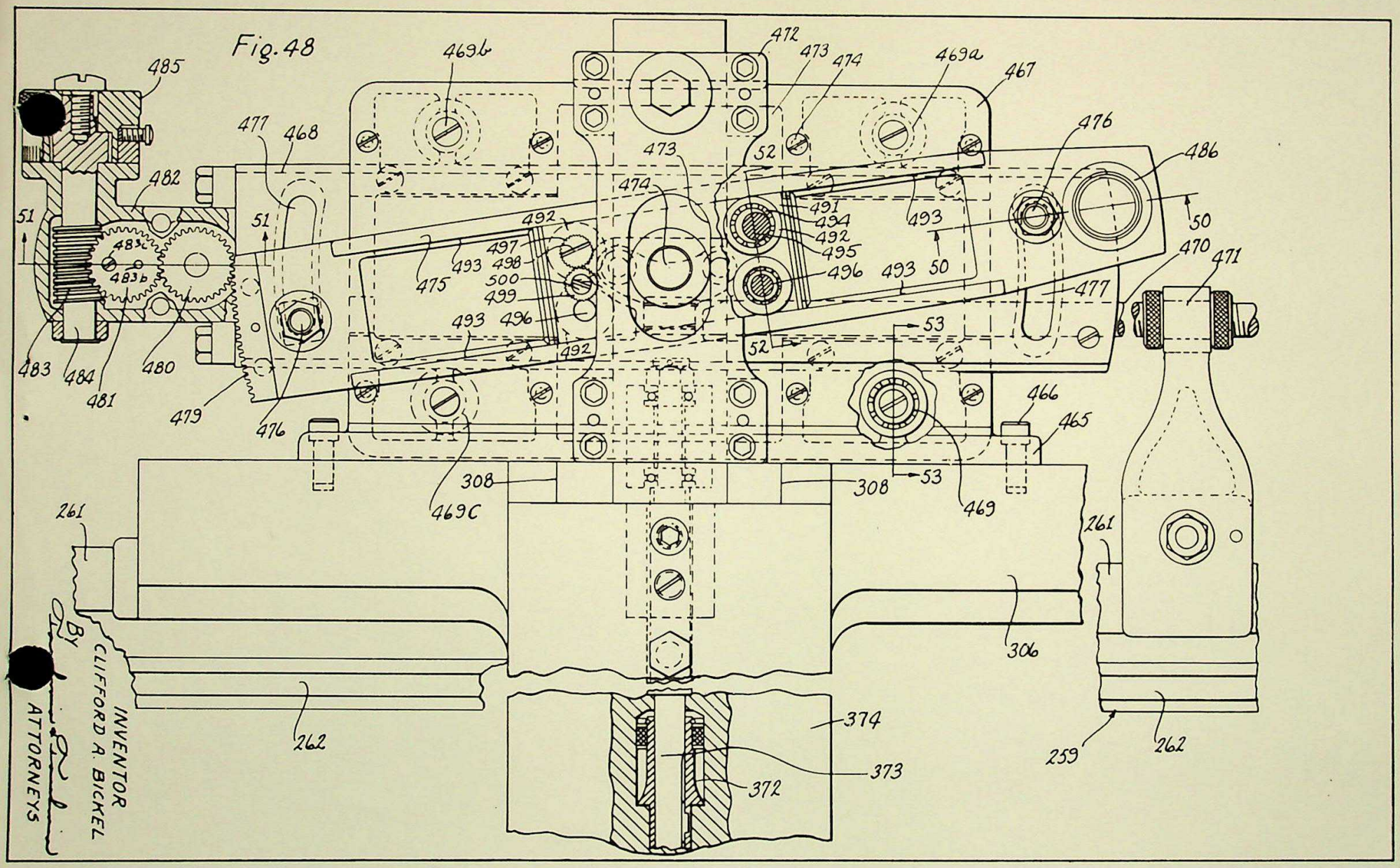
Fig. 48
485
482
483c
483b
483
484
481
480
479
51
477
468
476
469b
472
473
474
469a
467
52
491
494
492
495
496
493
50
486
470
471
497
498
500
499
475
53
466
465
469
469c
308
261
262
306
374
373
372
259
INVENTOR
CLIFFORD A. BICKEL
BY
ATTORNEYS

Fig. 49

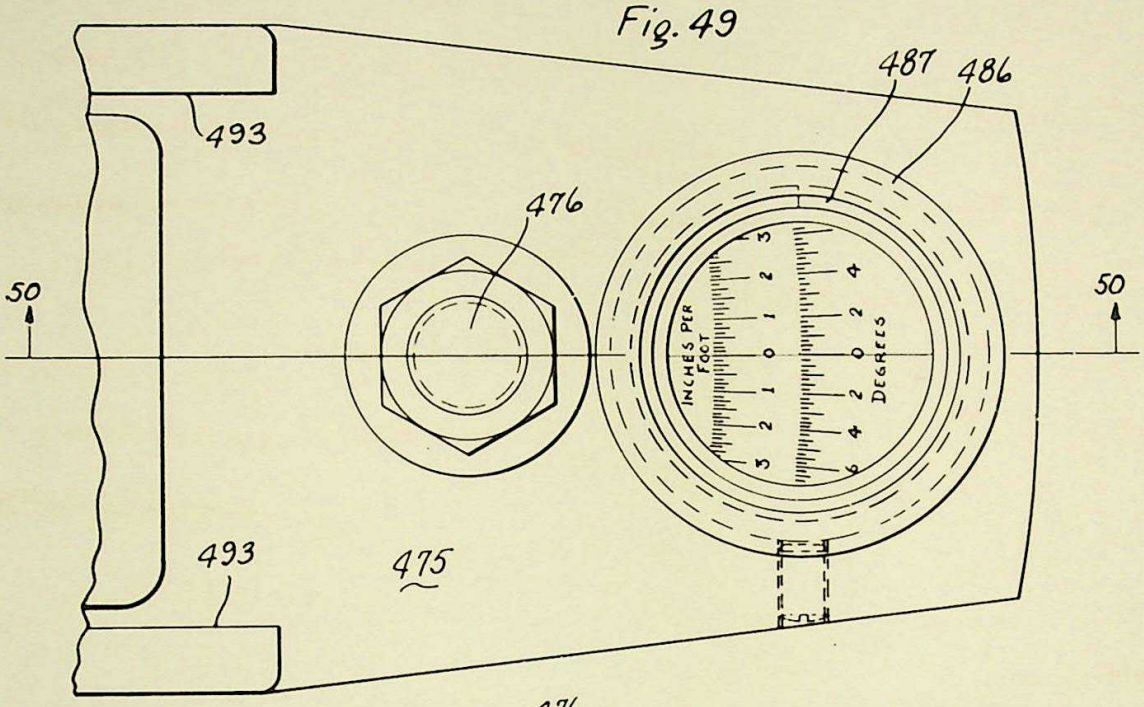

Fig. 50

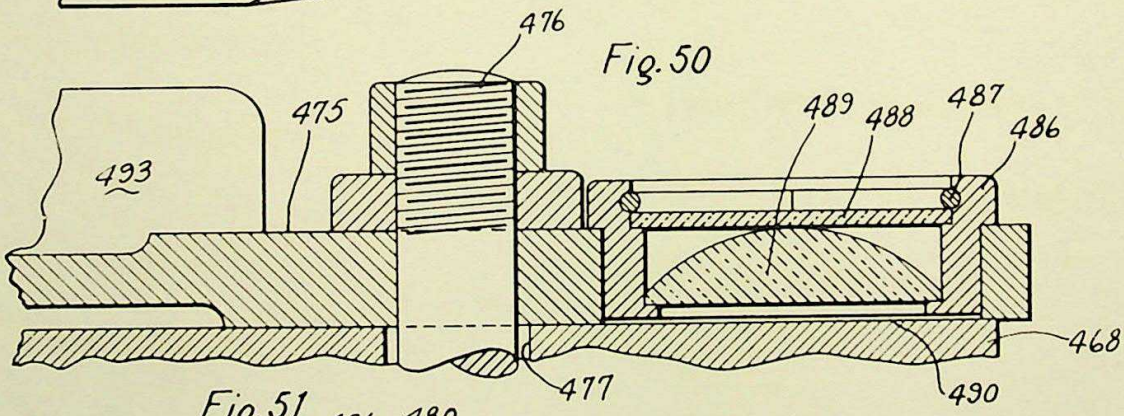

Fig. 51

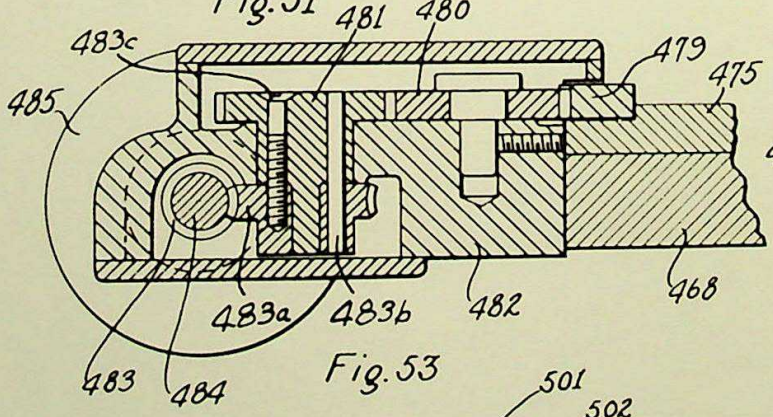

Fig. 52

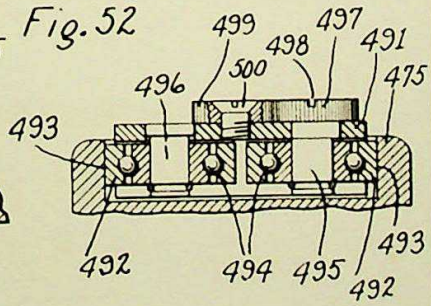

Fig. 53

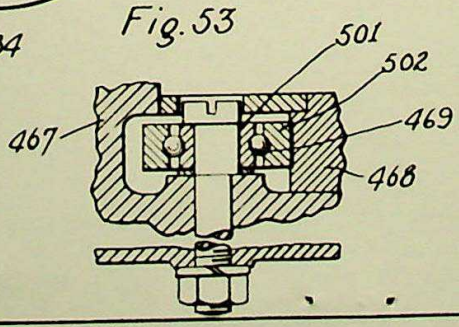

INVENTOR
CLIFFORD A. BICKEL
BY
ATTORNEYS

FIG. 54

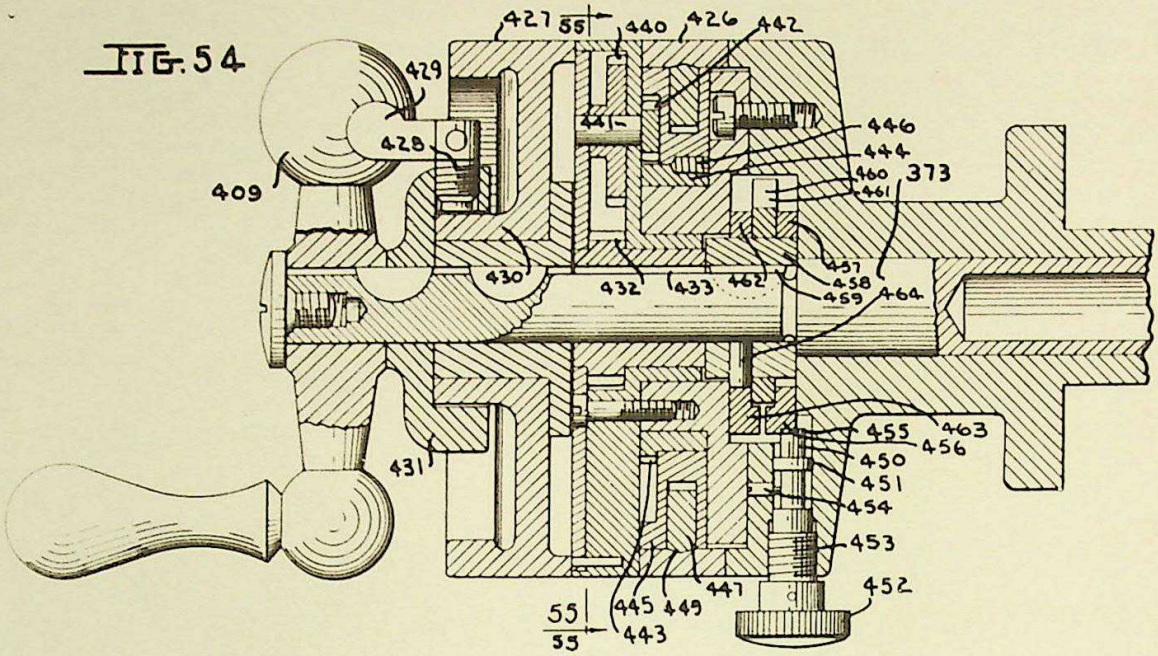

FIG. 55

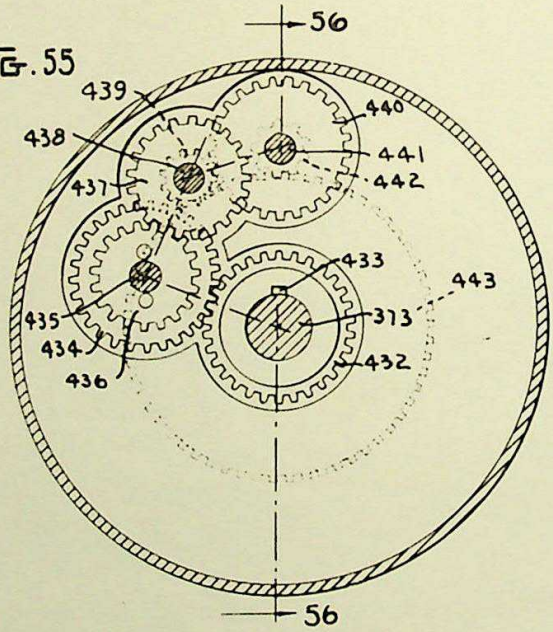

FIG. 56

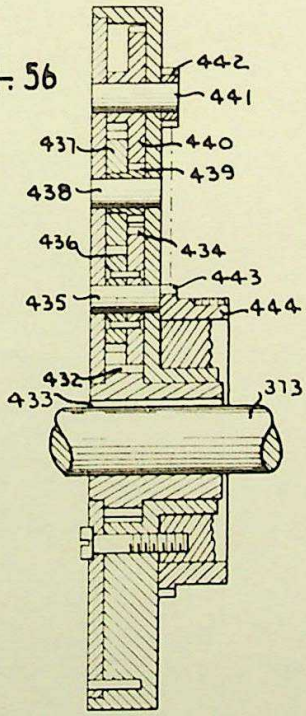

Inventor
CLIFFORD A. BICKEL

by [illegible]
Attorneys

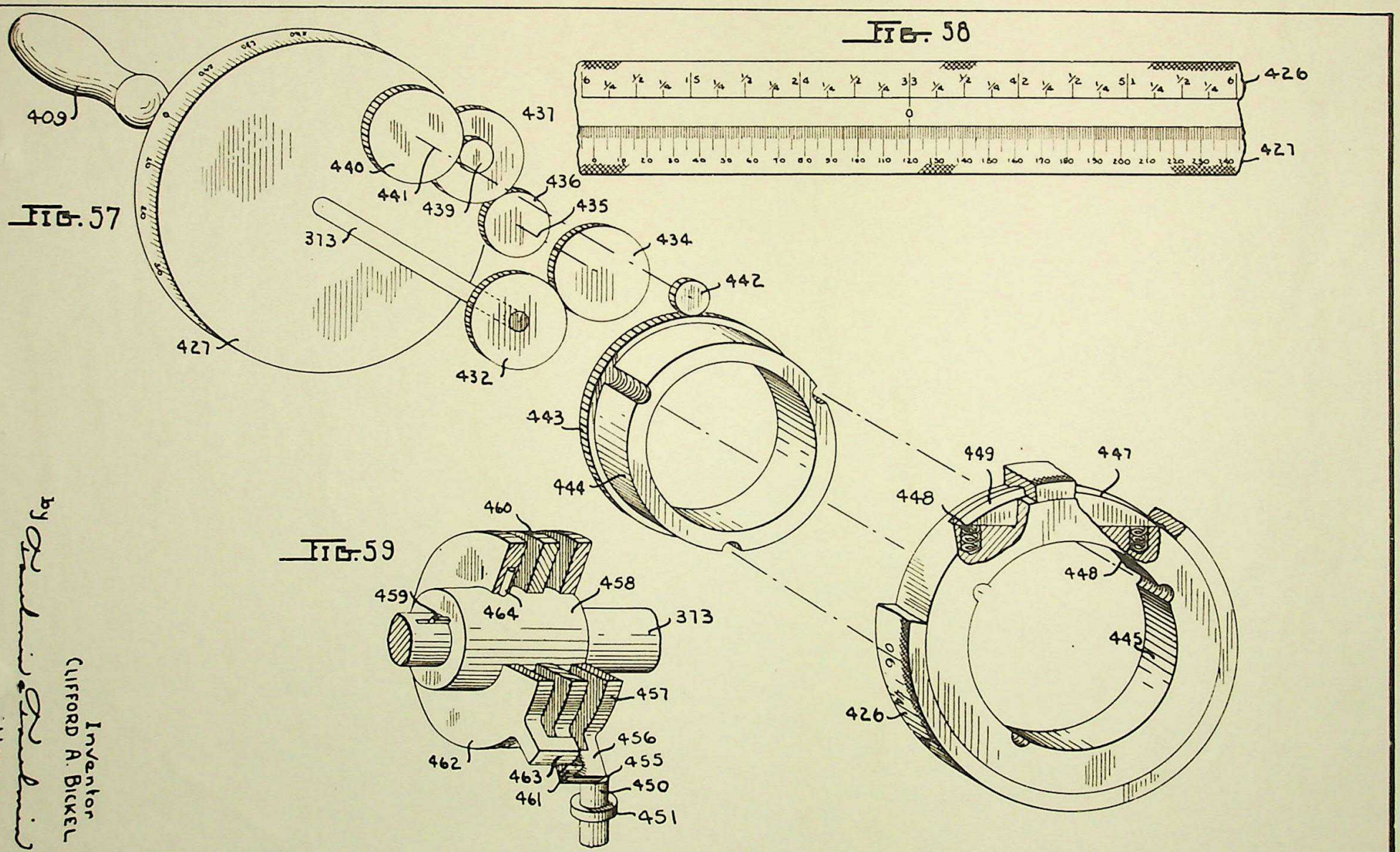

Inventor
CLIFFORD A. BICKEL
by
Attorneys

FIG. 60

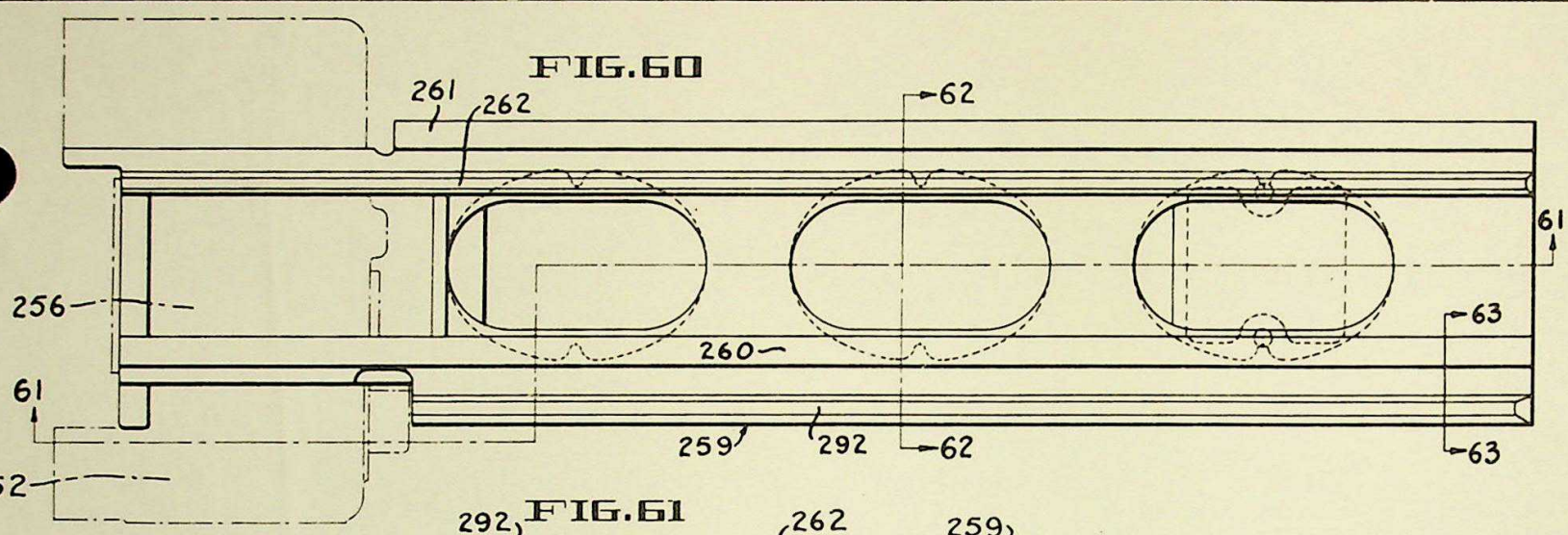

FIG. 61

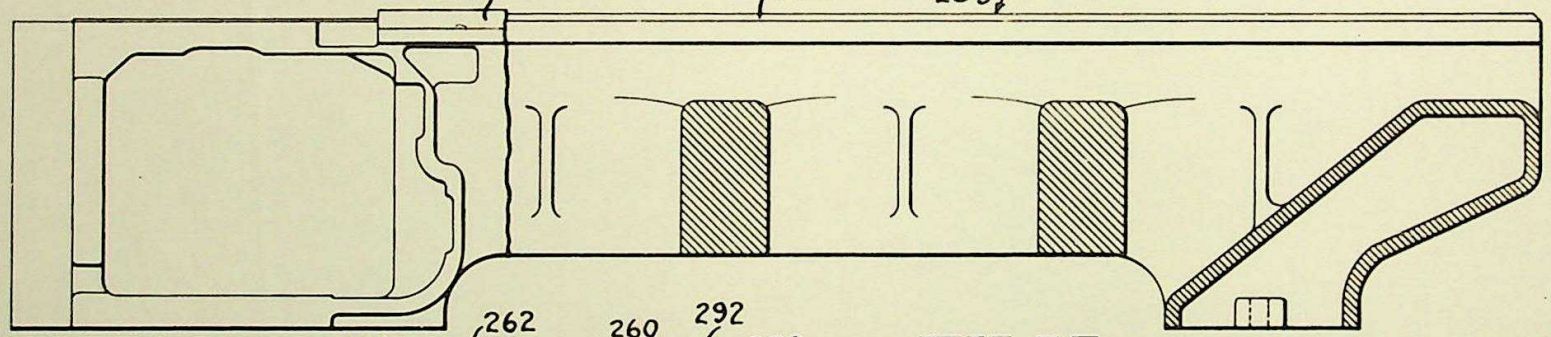

FIG. 62

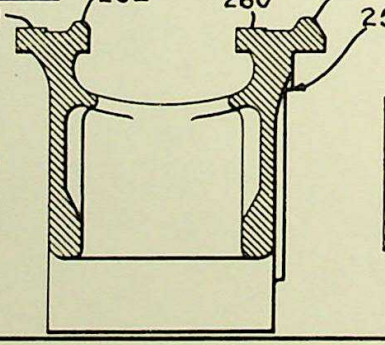

FIG. 63

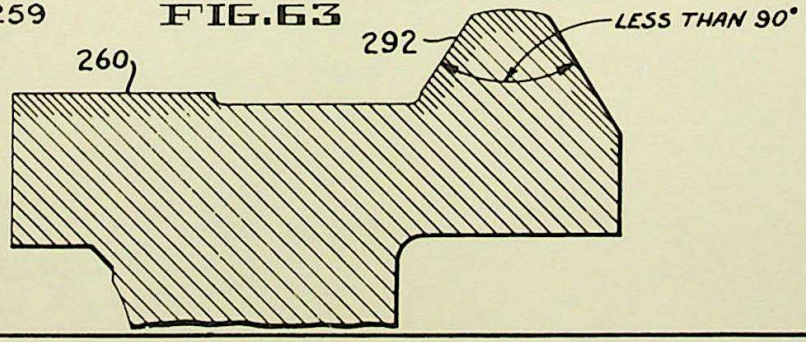

INVENTOR
CLIFFORD A. BICKEL
BY
ATTORNEYS

FIG. 64

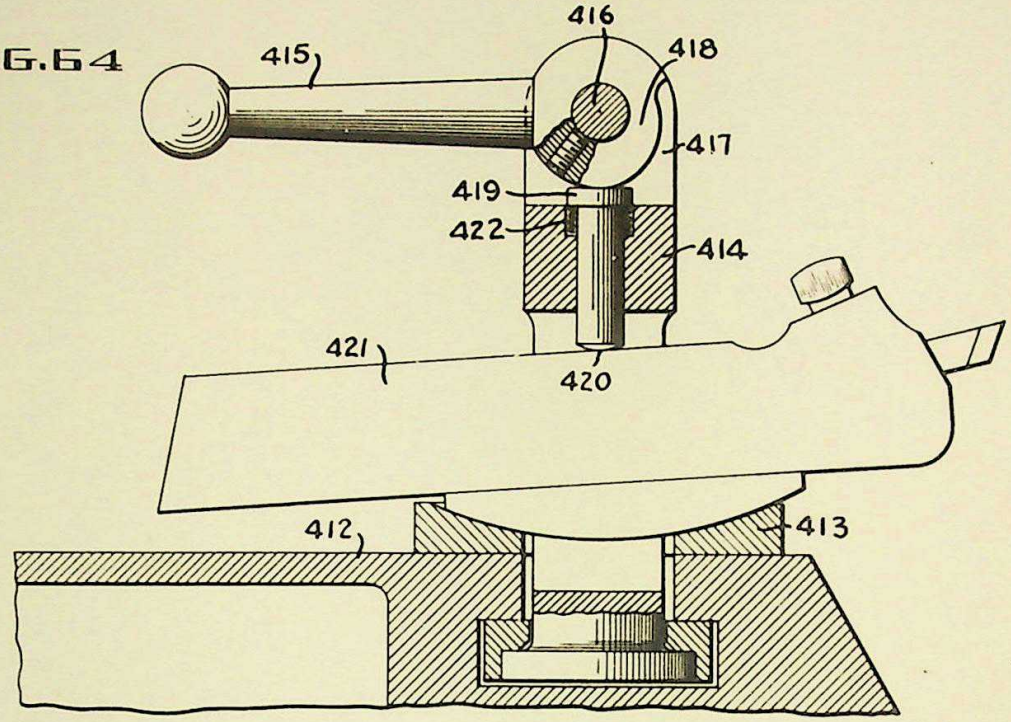

FIG. 65

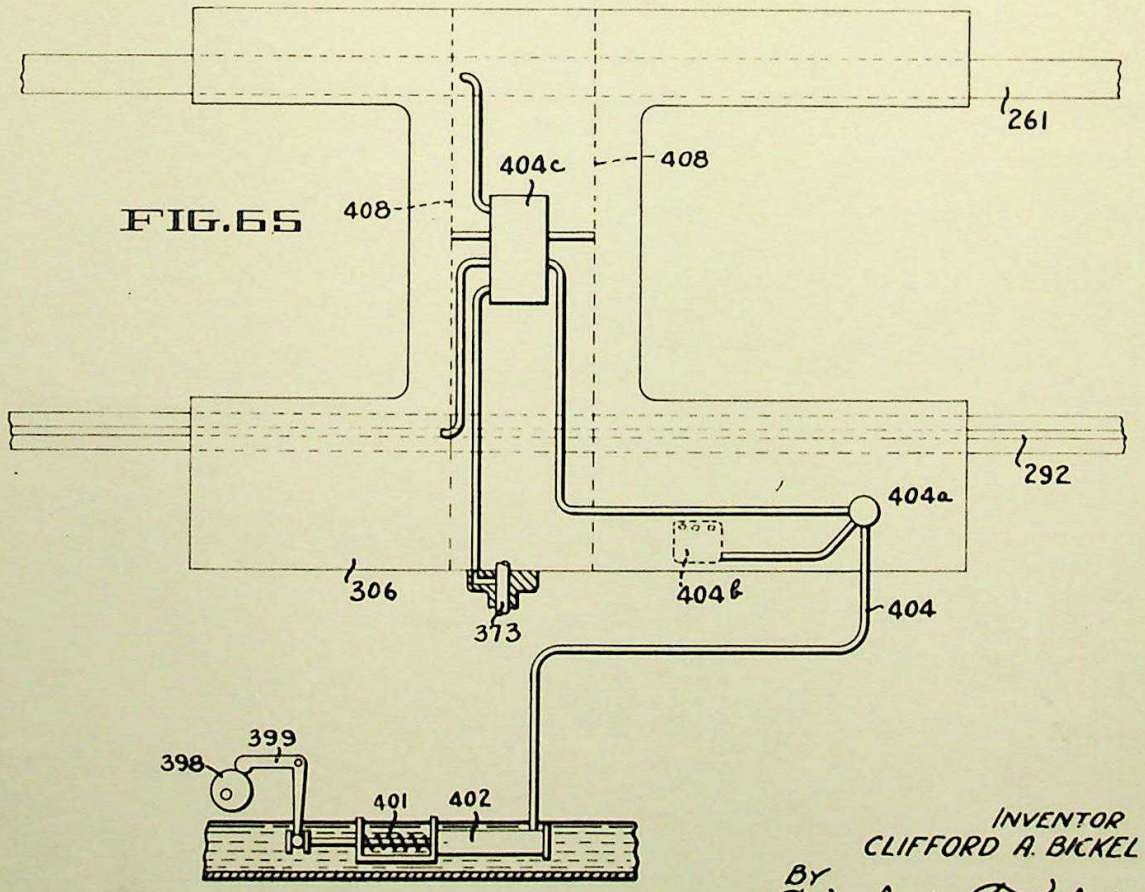

INVENTOR
CLIFFORD A. BICKEL
BY
ATTORNEYS

NOV 20 1939